WALLINGFORD

ZONING

REGULATIONS

Effective September 29, 1985

As Amended

AMENDED:

December 15, 1985
January 13, 1986
March 15, 1986
April 14, 1986
May 11, 1986
July 20, 1986
August 16, 1987
November 2, 1987
February 28, 1988
March 15, 1988
April 19, 1988
May 17, 1988
June 19, 1988
August 8, 1988
September 3, 1988
October 28, 1988
January 10, 1989
January 17, 1989
April 8, 1989
June 18, 1989
September 19, 1989
October 11, 1989
January 30, 1990
April 17, 1990
May 14, 1990
September 12, 1990
September 18, 1990
November 22, 1990
December 15, 1990
January 20, 1991
March 17, 1991
May 19, 1991
July 14, 1991
October 23, 1991
December 15, 1991
January 19, 1992
April 19, 1992
May 16, 1992
September 19, 1992
October 20, 1992
December 19, 1992
February 14, 1993
April 11, 1993
July 30, 1993
September 19, 1993
December 12, 1993
April 16, 1994
May 14, 1994
October 2, 1994
October 8, 1994
October 16, 1994
January 15, 1995
February 5, 1995
March 9, 1995
August 22, 1995
November 18, 1995
November 19, 1995
November 23, 1995
December 16, 1995
January 14, 1996
August 10, 1996
September 15, 1996
December 14, 1996
March 15, 1997
May 18, 1997
November 29, 1997
December 13, 1997
February 7, 1998
March 14, 1998
May 1, 1998
May 2, 1998
May 17, 1998
November 13, 1998
November 14, 1998
December 12, 1998
February 14, 1999
May 1, 1999
May 15, 1999
September 19, 1999
November 14, 1999
December 19, 1999
January 5, 2000
April 16, 2000
June 18, 2000
October 15, 2000
October 16, 2000
December 16, 2000
January 14, 2001
March 4, 2001
May 19, 2001
July 14, 2001
September 15, 2001
January 19, 2002
February 16, 2002
March 15, 2002
April 12, 2002
June 15, 2002
August 17, 2002
November 19, 2002
February 15, 2002
May 17, 2003
June 14, 2003
October 1, 2003
October 18, 2002
February 14, 2004
March 13, 2004
April 17, 2004
June 19, 2004
October 17, 2004
November 13, 2004
December 18, 2004
March 19, 2005
April 9, 2005
June 18, 2005
September 17, 2005
October 16, 2005
February 19, 2006
September 16, 2006
November 18, 2006
January 13, 2007
June 16, 2007
September 15, 2007
November 3, 2007
November 17, 2007
January 19, 2008
March 15, 2008
April 19, 2008
June 14, 2008
August 16, 2008
September 13, 2008
March 14, 2009
April 18, 2009
May 1, 2009
July 18, 2009
September 19, 2009
October 7, 2009
January 16, 2010
February 13, 2010
March 13, 2010
May 15, 2010
June 19, 2010
July 17, 2010
August 14, 2010
October 16, 2010
December 17, 2010
February 19, 2011
March 19, 2011
October 1, 2011
October 15, 2011
March 17, 2012
January 1, 2013
March 2, 2013
April 1, 2013
December 10, 2013
April 24, 2014
June 09, 2014
August 18, 2014
August 23, 2014
November 16, 2014
December 8, 2014
January 12, 2015
May 15, 2015
July 18, 2015
October 1, 2015
July 3, 2016
December 1, 2016
January 13, 2017
February 17, 2017
May 16, 2017
November 17, 2017
August 17, 2018
February 17, 2019

July 29, 2019
August 16, 2019
July 17, 2020
November 13, 2020
December 18, 2020

These Zoning Regulations have been paginated and retyped.
Correction to Geriatric Healthcare - Sections 2.2 & 4.2.C.5 as of 01/21/05.

TABLE OF CONTENTS

PAGE

ARTICLE I – Enactment, Purpose, Title, and Interpretation
1.1 Enactment; Short Title; Effect 9
1.2 Purpose 9
1.3 Conformance Required; Completion of Structures For Which Building Permit Has Been Issued 10
1.4 Interpretation of Regulations 10
1.5 Application of Regulations 10

ARTICLE II – Definitions
2.1 General Terms 11
2.2 Specific Terms 11
2.3 Illustrations and Graphics 27
A. Visibility at Street Intersections 27
B. Typical Lots and Yard Areas 28
C. Measurements of Building Heights, Stories and Basements 29
D. Design Standards for Parking 30
E. Typical Arrangement for 90° Parking and Loading Area 31
F. Flood Plain Cross-Section 32
G. Sediment and Erosion Controls 33
H. Lot Widths and Depths 34
I. Special Treatment at Long Driveways 35
J. Alternate Treatment at Long Driveways ..... Deleted 01/01/13
K. Standard Bituminous Concrete Apron w/Bituminous Concrete Curb and Concrete Walk 36
L. Examples of Types of Signs 37

ARTICLE III – Zoning Districts and Boundaries
3.1 Establishment of Districts 38
3.2 Official Zoning Map 38
3.3 District Boundaries and Official Zoning Map 39
A. Along Right-of-Way 39
B. Map Dimensions 39
C. Physical Markers 39
D. Lot Boundaries 39
E. Lots Lying Within More Than One District 39

ARTICLE IV – Use Regulations
4.1 Residence Districts (R-18, R-15, R-11, R-6) 40
4.2 Rural Districts (RU-160, RU-80, RU-40, RU-120) 47
4.3 Open Space Planned Residential (OSPRD) Districts 52
4.4(A) Central Limited Business District (CLB) 57
4.4(B) Yalesville Limited Business District (YLB) 60
4.5 Commercial (CA) Districts 63
4.6 Commercial (CB) Districts 67
4.7 Downtown Apartment (DA) District 70
4.8 Industrial Districts 71
4.9 Industrial Expansion (IX) District 75
4.10 Interchange (I-5) District 78
4.11 Design (DD) District 82
4.12 Aquifer Protection (APD) District Deleted 02/19/06 85
4.13 Watershed Protection (WPD) District 85
4.14 Multi-Family Residence Districts (RM-40, RM-18, RM-11, RM-6) 87
4.15 Quarry Support Overlay (QSO) Zone 90
4.16 U.S. Route 5 Corridor District (RF-40) 91
4.17 Neighborhood Business District (NBD) 96
4.18 North Wallingford IX Zone 98

4.19 Housing Opportunity District (HOD) 99
4.20 Wallingford Housing Opportunity District (WHOD) 103
PAGE
4.21 Housing Opportunity District-Multi-Family (HOD-MF) 107
4.22 Tracy Zone (T-30) 108
4.23 Incentive Housing Zone (IHZ) 111
4.24 Rental Housing Opportunity District (RHOD) 125
4.25 Housing Opportunity District – General (HOD-G) 129
4.26 Town Center District (TC) 135

ARTICLE V – Lot and Building Requirements
5.1 Schedules of Lot and Building Requirements 148
A. Rural and Residence Districts 149
B. Limited Business and Commercial Districts 150
C. Industrial Expansion, Interchange Districts and RF5 Design Districts 151
5.2 Additional Area Regulations 152
A. Reduction of Lot Area or Dimensions 152
B. Yard Required for Each Building 152
C. Projections Into Open Space 152
D. Lots Adjacent to Railroad 152
E. Prohibited Transfers of Property 152
F. Required Front Yards 152
G. Spacing 153
H. Minimum Lot Area 153

ARTICLE VI – Supplementary Regulations
6.1 Height Limitation 155
6.2 Accessory Buildings-Locations 155
6.3 Building on Unaccepted Streets 157
6.4 Setbacks from Bodies of Water 158
6.5 Floodplain Regulations 159
6.6 Rear Lots 167
6.7 Use of Mobile Home for Sleeping or Living Purposes 168
6.8 Open Space Subdivision 169
6.9 Signs 173
6.10 Excavation and Filling of Land 182
6.11 Off-Street Parking and Loading Facilities 187
6.12 Outside Storage 192
6.13 Non-Conforming Uses, Building and Lots 194
6.14 Landscaping, Screening and Buffer Areas 197
6.15 Accessory Apartments 200
6.16 Adaptive Re-Use to Multi-Family 202
6.17 Automatic Amusement Devices……Deleted 5/14/94 202
6.18 Soil Erosion and Sediment Control 203
6.19 Sale of Alcoholic Liquors for Off-Premises Consumption 206
6.20 Adult Uses Regulations 207
6.21 Fencing Required for Lots Along I-91 210
6.22 Multi-Family Conversion 211
6.23 Site Lines at Intersections 211
6.24 Roof Structures 212
6.25 Telecommunications Facilities 213
6.26 Utilities & Lighting 214
6.27 Slopes 216
6.28 Guardrails 216
6.29 Fire Protection 216
6.30 Grading; Water & Watercourses 216
6.31 Access 217
6.32 Medical Marijuana Moratorium 217
6.33 Building Orientation 217

PAGE

ARTICLE VII – Site Plan and Special Permit Review (10/18/03)
7.1 Site Plan 218
7.2 Site Plan Objectives 218
7.3 Procedure 219
7.4 Site Plan Information 220
7.5 Special Permits 223
A. Applicability 223
B. Criteria for Evaluating a Special Permit 223
C. Procedure 224
D. Public Hearing and Notice 224
E. Special Permit Time Limits 225
F. Conditions and Safeguards 226
G. Revocation 226
H. Amendments or Modifications 226
I. Time Period Expiration 226
J. Continuance 226
K. Waiver 226

ARTICLE VIII – Enforcement and Administration
8.1 Authority 227
8.2 Enforcement 227
8.3 Zoning Permits 227
8.4 Building Permits 228
8.5 Foundation Verification 228
8.6 Utility Verification 228
8.7 Certificate of Zoning Compliance 230
8.8 Certificate of Occupancy 230
8.9 Fees 230
8.10 Performance Bonds 230
8.11 Violations 232

ARTICLE IX – Zoning Board of Appeals
A. Purpose 233
B. Establishment of the ZBA 233
C. Powers and Duties 233
D. Rules and Procedure 233
E. Public Hearings Conducted by ZBA 233
F. Decisions of ZBA 234
G. Deleted – October 1, 2003 234
H. Variances 234
I. Interpretation 235
J. Special Exceptions 235
K. Time of Decision 235
L. Interval Between Hearings 236
M. Flood Variance 236

ARTICLE X – Amendments
10.1 Initiation of Amendments; Hearing 237
10.2 Notice of Hearing 237
10.3 Filing of Protest 237
10.4 Application for Amendment 238
10.5 Notice to Regional Planning Agency 238
10.6 Action by Planning and Zoning Commission 238
10.7 Application Fee; Additional Costs 238
10.8 Re-Application 238

ARTICLE XI – Validity
11.1 Severability of Provisions 239

ARTICLE 1

Enactment; Purpose; Title; Interpretation

§1.1 ENACTMENT; SHORT TITLE; EFFECT

The Wallingford Planning and Zoning Commission, acting under authority of Chapter 124, §8-3, of the Connecticut General Statutes, hereby amends and codifies the Zoning Regulations, Town of Wallingford, effective November 7, 1958, as amended, so that the same shall be as set forth below. The provisions of said regulations and the amendments thereto, insofar as they are consistent with these regulations, are not repealed but are codified in these regulations. Any and all provisions of said regulations as amended which are inconsistent with these regulations are hereby repealed, but such repeal shall not affect any violation which occurred before these regulations (or any amendment thereof) were adopted, or exists, or any penalty incurred, nor any prosecution thereof under said regulations as amended.

§1.2 PURPOSE

These regulations are designed to promote the purposes authorized by Chapter 124, including but not limited to §8-2, of the Connecticut General Statutes, as follows: to regulate the height, number of stories and size of buildings and other structures, the percentage of the area of the lot that may be occupied, the size of yards, courts and other open spaces, the density of population and the location and use of the buildings, structures and land for trade, industry, residence and other purposes; to regulate the height, size and location of advertising signs and billboards within the limits of the Town; to divide the Town into districts of such number, shape and area as may be best suited to carry out the purposes of the statute; to regulate the erection, construction, reconstruction, alteration or use of buildings or structures and the use of land in accordance with a comprehensive plan; to lessen congestion in the streets; to secure safety from fire, panic and other dangers; to promote health and the general welfare; to provide adequate light and air; to prevent the overcrowding of land; to avoid undue concentration of population; to facilitate adequate provision of transportation, water, sewerage, schools, parks and other public requirements with full consideration of the character of the districts and their suitability for particular uses; to protect historically, architecturally and culturally significant buildings and sites, to encourage energy efficient patterns of development, encourage use of solar and other renewable forms of energy, protect subsurface water supplies and protect against sedimentation of waterways and erosion caused by wind, rain and water movement; to conserve the value of buildings and encourage the most appropriate use of land throughout said Town.

§1.3 CONFORMANCE REQUIRED; COMPLETION OF STRUCTURES FOR WHICH BUILDING PERMIT HAS BEEN ISSUED *Amended 05/15/15*

No building or structure shall be erected, reconstructed, structurally altered, enlarged, moved or maintained, nor shall any building, structure or land be used or be designed for any use, other than as permitted by these regulations in the district in which such building, structure or land is located, and in compliance with all provisions of law, ordinance, codes and regulations that may apply. No lot shall be less in area or width nor have smaller yards nor shall any building or buildings occupy in the aggregate a greater percentage of the lot, nor shall any building be greater in height than as prescribed in these regulations.

§1.4 INTERPRETATION OF REGULATIONS *Amended 05/15/15*

These regulations are not intended to interfere with, abrogate or annul any other ordinance, regulation or other provision of law, or any easements, covenant or other public agreement or legal relationship. When these regulations impose restrictions on use or development standards different from those imposed by any other law, statute, ordinance, covenant or private agreement or legal relationship, whichever provisions are more restrictive or impose higher standards shall control. Should there be ay discrepancy or incongruity between these regulations and any other law, statute, ordinance, or regulations, the more restrictive standard shall control; these regulations do not allow any use, structure, development or activity which is illegal under local, State, or Federal law. It is not intended by these regulations to repeal any permit previously issued pursuant to law.

§1.5 APPLICATION OF REGULATIONS

Any application made prior to the effective date of these regulations and legally pending before the Planning & Zoning Commission, Zoning Board of Appeals, or Building Inspector shall be considered under the provisions of the previous zoning regulations (Zoning Regulations of the Town of Wallingford, 1980, as amended).

ARTICLE II

Definitions

§2.1 GENERAL TERMS

Unless otherwise expressly stated, the following words and phrases shall be construed throughout these regulations to have the meaning indicated in this article.

Unless the context clearly indicates the contrary, words used in the present tense include the future, the singular number includes the plural, and the plural includes the singular.

The word "person" includes a profit or non-profit corporation, company, partnership or individual.

The word "Town" shall mean the Town of Wallingford.

The word "regulations" shall mean the Zoning Regulations of the Town of Wallingford.

The word "shall" is mandatory and not directory; the word "may" is permissive.

The word "lot" includes the word "plot".

The word "structure" includes the word "building".

The word "use" and the word "used" refers to any purpose for which a lot or part thereof is arranged, intended, or designed to be used, occupied, maintained, made available, or offered for use, and to any purpose for which a building or structure or part thereof, is arranged, intended or designed to be used, occupied, maintained, made available, or offered for or erected, constructed, altered, enlarged, moved, or rebuilt with the intention or designed of using the same.

Words not specifically defined herein shall be used as defined in the latest edition of the American Heritage College Dictionary. *12/17/10*

§2.2 SPECIFIC TERMS

Accessory Use or Building - A use or building, or both, customarily incidental and subordinate to the principle use or building, in character with the surrounding zone, and located on the same lot as such principle use or building or on a contiguous lot under the same ownership.

Affordable Housing - Housing which, per the requirements of Section 8-30g(k)(3) of the Connecticut General Statues, is subject to binding recorded deeds containing covenants or restriction which require that such dwelling units be sold or rented at, or below, prices which will preserve the units as housing for which persons and families pay thirty percent (30%) or less of their annual income, where such income is less than or equal to eighty percent (80%) of the area median income for the municipality in which such housing is located, as determined by the United States Department of Housing and Urban Development, and in accordance with an approved affordability plan that is deemed consistent with the requirements of Section 8-30g and any regulations adopted by the Commissioner of Housing for such affordability plan pursuant to Connecticut General Statute 8-30g. *01/13/17*

Antenna - a devise used to collect or transmit telecommunications or radio signals. Examples are panels, microwave, dishes, and single poles known as whips. *05/18/97*

Apartment - A portion of a building used as a separate dwelling unit with its own sanitary facilities, kitchen and private access.

Apartment, Accessory - A dwelling unit which is an integral part of a principal one-family dwelling but subordinate in terms of size and location, constructed such that the unified appearance of a single-family dwelling is maintained. *03/15/08*

Applicant - An individual, firm, association, syndicate, partnership, corporation or the official agent thereof, having recorded title to the land or building, or sufficient proprietary interest to seek development or use of the premises.

Area of Shallow Flooding – A designated AO or AH zone on a community's Flood Insurance Rate Map (FIRM) with a one percent or greater annual chance of flooding to an average depth of one to three feet where a clearly defined channel does not exist, where the path of flooding is unpredictable, and where velocity flow may be evident. Such flooding is characterized by ponding or sheet flow. *12/17/10*

Assisted Living Center – Any residential development owned and operated by an entity however organized which provides assistance with the activities of daily living including, but not limited to, routine household and nursing services to clients primarily age 55 or older living within a managed residential community having supportive services that encourage the maintenance of a maximum level of independence. *11/29/97*

Automatic Amusement Device - Any machine which upon the insertion of a coin, slug, token, plate or disc or activated by any other means may be operated by the public generally for use as a game, contest, entertainment or amusement, whether or not registering a score. It shall include, but not be limited to, such devices as marble machines, pinball machines, movie and video booths or stands, games played with any number of balls, spheres or electrically operated devices upon a table or board having holes, pockets, cups or electrically activated devices that are actuated by said balls or spheres or electrical contacts, electrical impulse and/or cathode tube games, electronic games, and all games, operations or transactions similar thereto under whatever name by which they may be indicated. Said term shall not include a pool or billiard table.

Base Flood - The flood having a one percent chance of being equaled or exceeded within any one year interval, as designated on the Flood Insurance Rate Map and measured in accordance with the *North American Vertical Datum (NAVD)0F 1988* *12/17/10*

Base Flood Elevation (BFE) – The elevation of the crest of the base flood or 100-year flood. The height in relation to mean sea level expected to be reached by the waters of the base flood at pertinent points in the floodplains of coastal and riverine areas. *12/17/10*

Basement - A story in a building, the structural ceiling level of which is four feet or more above the average level of finished grade where such grade abuts the exterior wall of such building and floor level of which is below finished grade at any point on the periphery of the building. *For flood management purposes, a basement is any area of the building having its floor subgrade (below ground level) on all sides.* *12/17/10*

Bed and Breakfast Inn – A residential home, occupied by its owner or an innkeeper where rooms are rented to overnight guests for a total period of not more than one week and meals are served to those overnight guests. *10/16/09*

Buffer or Buffer Area - A strip of land along a property line which shall be free of any building or use other than landscape materials, which may be a part of the minimum yard requirements.

Building - Any structure having a roof supported by columns or walls or intended for the shelter, housing or enclosure of persons, animals or materials. Any other structure more than eight feet high shall be considered as a "building", including a fence or a wall, but excluding a public utility pole or flagpole. For the purposes of these regulations, there shall be no differentiation between "permanent" buildings and "temporary" buildings; all buildings shall comply with the requirements in these regulations. *02/17/17*

Building Area - The ground area enclosed by the walls of a building, together with the area of all covered porches and other roofed portions.

Building Code - The Building Code of the Town of Wallingford or the State of Connecticut, whichever shall be applicable.

Building Coverage - The percentage, which the aggregate building area of all building on the lot bears to the area of the lot.

Building Frontage – The outside wall of the building or portion thereof that directly faces the front property line of the lot on which it is located without obstruction by any other wall or building or portion thereof, except that when none of the walls of a building meet this definition, the building frontage shall be the wall of the building containing the main entrance to the building.

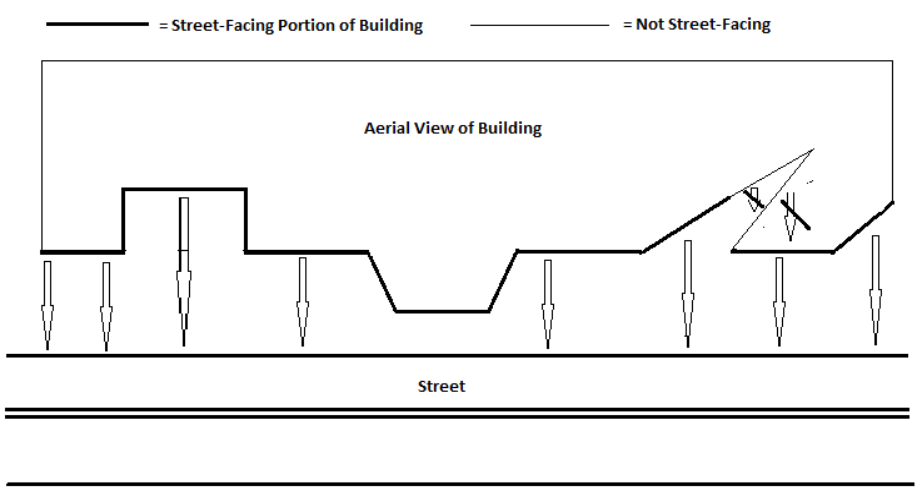

08/17/18

Building Height - The vertical distance from the mean finished grade, calculated by adding the elevation of the grade at teach corner points of the building and dividing b the total number of point, to the highest point of any flat or mansard roofs, including the top of a parapet, or to the highest mean level between the eave and the peak of gable, hip and/or gambrel roof line. A flat roof is one whose pitch has a rise of less than three inches in one foot of run. The provisions with respect to height shall not apply to rooftop mechanical utility structures. *02/17/17*

Building Line - A line parallel to the street line at a distance equal to the required front yard. *10/02/94*

Cellar - A portion of a building that is partly or entirely below grade, and which has more than one-half its height measured from floor to ceiling below the average finished grade of the ground adjoining the building.

Cellular telecommunications facility - a cellular telecommunications facility consists of the equipment and structures involved in receiving telecommunication or radio signals from a mobile radio communications source and transmitting those signals to a central switching computer which connects the mobile unit with the land-based telephone lines.

Change of Use Permit - A permit to allow the change of use from an existing use of land, building or structures on premises, or part thereof, to another proposed use, which is allowable in the applicable Zoning District.

Child Day Care Center - A place which offers or provides a program of supplementary care to more than 12 related or unrelated children outside their own homes on a regular basis for a part of the 24 hours in one or more days in the week.

Club - An association which is the owner, lessee or occupant of a premise operated solely for a recreational, social, political, patriotic, benevolent or athletic purpose but not for pecuniary gain, and includes the premise so operated. A "club" shall cater only to its members or guests accompanying them.

Commission - The Planning and Zoning Commission of the Town of Wallingford.

Condominium - A building containing a number of units which are subject to separate ownership by the occupants thereof.

Condominium Unit - A unit in a condominium.

Cooperative - A residential, commercial, or industrial establishment which is owned and operated by a mutual company which also runs and operates all common areas and facilities and which company is operated for the benefit of persons or families who are entitled to occupancy of the individual units by reasons of ownership of stock therein.

Cost – means, as related to substantial improvements, the cost of any reconstruction, rehabilitation, addition, alteration, repair or other improvement of a structure shall be established by a detailed written contractor's estimate. The estimate shall include, but not be limited to: the cost of materials (interior finishing elements, structural elements, utility and service equipment);sales tax on materials, building equipment and fixtures, including heating and air conditioning and utility meters; labor; built-in appliances; demolition and site preparation; repairs made to damaged parts of the building worked on at the same time; contractor's overhead; contractor's profit; and grand total. Items to be excluded include: cost of plans and specifications, survey costs, permit fees, outside improvements such as septic systems, water supply wells, landscaping, sidewalks, fences, yard lights, irrigation systems, and detached structures such as garages, sheds and gazebos. *12/17/10*

Development – Any man-made change to improved or unimproved real estate, including, but not limited to, *the construction of buildings or structures; the construction of additions, alterations or substantial improvements to buildings or structures; the placement of buildings or structures; mining, dredging, filling, grading, paving, excavation or drilling operations or permanent storage of equipment; the storage, deposition, or extraction of materials; and the*

installation, repair or removal of public or private sewage disposal systems or water supply facilities. *06/18/00, 12/17/10*

Disability Glare – Glare resulting in reduced visual performance and visibility. It often is accompanied by discomfort. *02/07/98*

District - A zone district established by the provisions of these regulations.

Driveway Length – Measurement from the edge of the approved roadway to the structure. *01/01/13*

Driveway Width – The surface measurement from the edges of the designated drivable surface. *01/01/13*

Angle of Approach – The maximum angle of an incline onto which a vehicle can move from a horizontal plane without interferences. *01/01/13*

Dumping - The dumping of garbage, refuse or debris.

Dwelling - Any permanent building or portion thereof designed or used exclusively as the residence or sleeping place of one or more persons. Dwelling shall not be deemed to include motel, hotel, recreational vehicle, mobile home, boat or tent.

Dwelling, Multi-Family - A building designed for more than two families living independently of one another.

Dwelling, Single-Family - A dwelling containing one (1) dwelling unit only. *01/15/95*

Dwelling, Two-Family - A detached building designed for or occupied by two families living independently of one another.

Dwelling Unit - A dwelling or portion thereof, providing a single housekeeping unit with living, sleeping, cooking and bathroom facilities.

Dwelling, Townhome – A residential building consisting of three (3) or more attached units in which each unit shares with the adjacent unit(s) a wall which extends from foundation to roof and has exterior walls on at least two sides. *08/23/14*

Eligible Household – A household whose annual income is at or below eighty percent (80%) of the area median income for Wallingford, as determined and reported by the United States Department of Housing and Urban Development (HUD). *08/23/14*

Existing Manufactured Home Park or Subdivision – A manufactured home park or subdivision for which the construction of facilities for servicing the lots on which the manufactured homes are to be affixed (including, as a minimum, the installation of utilities, the construction of streets, and either final site grading or the pouring of concrete pads) is completed before August 8, 1978, the effective date of the floodplain management regulations adopted by the community. *12/17/10*

Expansion to an Existing Manufactured Home Park or Subdivision – The preparation of additional sites by the construction of facilities for servicing the lots on which the manufactured homes are to be affixed (including the installation of utilities, the construction of streets, and either final site grading or the pouring of concrete pads). *12/17/10*

Family - Any number of individuals related by blood or marriage, or not more than six persons not so related, living together on the premises as a single housekeeping unit.

Family Day Care Home - A private family home, caring for not more than six children including the provider's own children not at school full-time, where the children are cared for not less than three nor more than 12 hours during a 24-hour period, and where care is given on a regularly recurring basis.

Farm - A tract or parcel of land, which may or may not include a residential dwelling, containing an area of five acres or more, otherwise used wholly or in part for agricultural or farming purposes, limited to the raising of truck, nursery, forestry, fruit, berry and other crops, dairy, cattle, horse, swine, and poultry farming. Accessory uses shall include storage, treatment, and processing and sales of such items produced solely on the premises.
10/02/94, 11/17/07

Farm Stand – A kiosk open on at least two sides used by a farm business for the temporary, seasonal sale of raw and/or processed agricultural products. *5/15/10*

Farm Store – A permanent building used by a farm business for the year-round sale of raw and/or processed agricultural and horticultural products. *5/15/10*

Farm Winery – Any place or premises, located on a farm on which wine/wine products (limited to wine and brandies distilled from grape products and other fruit products, including grappa, eau-de-vie, flavored brandies, ciders, and hard cider)are manufactured or sold. Any such manufacture or sale shall be done only with proper licensing from the State of Connecticut. The winery may or may not include a residential dwelling and shall have no less than five (5) acres under cultivation for the production of wine. By the eighth (8th) year after the issuance of its farm winery permit by the State of Connecticut, the farm winery shall grow on the premises of the farm winery an average crop of grapes equal to at least twenty-five percent (25%) of the grapes used in its manufacture of wine.
11/14/99, 11/17/07, 07/03/16

Federal Emergency Management Agency (FEMA) – The federal agency that administers the National Flood Insurance Program (NFIP). *12/17/10*

Flood or Flooding – A general and temporary condition of partial or complete inundation of normally dry land areas from either the overflow of inland or tidal waters, or the unusual and raped accumulation/runoff of surface waters from any source. *12/17/10*

Flood Insurance Rate Map(FIRM) - An official map of the Town upon which the Federal Insurance Administration has delineated both the special hazard areas and the risk premium zones applicable to the Town.

Flood Insurance Study – An examination, evaluation and determination of flood hazards and, if appropriate, corresponding water surface elevations, or an examination, evaluation and determination of mudslide and/or flood-related hazards
06/18/00

Flood-proofed - Watertight, having walls substantially impermeable to the passage of water, and with structural components having the capability of resisting hydrostatic and hydrodynamic loads and effects of buoyancy.

Flood-proofing - Any combination of structural and non-structural additions, changes, or adjustments to structures which reduce or eliminate flood damage to

real estate or improved real property, including water and sanitary facilities, structures and their contents.

Floodway - The channel of a river or other watercourse with adjacent land areas that shall be reserved in order to discharge the base flood without cumulatively increasing the base flood elevation more than one foot. *04/19/88*

Floor Area - The gross horizontal area of the floor of the building, together with any covered or roofed areas of that floor. *02/17/17*

Floor Area, Gross(GFA) - The sum of the floor area of all floors of the building, measured from the exterior faces of exterior walls, together with any covered or roofed areas of each floor. For the purposes of calculating gross floor area for a portion of the building, GFA shall be measured from the center line of any interior walls separating that portion from another portion of the building. In particular, the "Floor Area" of a building shall include:

- Basement space
- Elevator shafts and stairwells at each floor
- Floor space for mechanical equipment
- Penthouses
- Attic space (whether or not a floor has actually been laid) providing structural headroom of seven feet, six inches or more
- Interior balconies and mezzanines
- Enclosed and covered porches
- Accessory uses and buildings, not including space for accessory off-street parking. *02/17/17*

However, the "floor area" of a building shall not include:

- Cellar space, except that cellar space used for retailing shall be included for the purpose of calculating requirements for accessory off-street parking spaces and accessory off-street loading berths
- Elevator and stair bulkheads, accessory water tanks and cooling towers
- Uncovered steps
- Terraces and open spaces
- Accessory off-street parking spaces

Floor Area, Livable(LFA) - The floor area of a dwelling unit finished for occupancy, measured from the inside of the walls, but not including porches, utility rooms, garages, bay windows or public hallways and capable of maintaining an interior room temperature, having adequate ventilation and meeting dimensional requirements in accordance with the provisions of applicable codes. *02/17/17*

Full Cut-Off Type Fixture – A luminaire or light fixture that, by design of the housing, does not allow any light dispersion or direct glare to shine above a 90-degree horizontal plane from the base of the fixture. Full cut-off fixtures must be installed in a horizontal position as designed, or the purpose of the design is defeated and disability glare will result. *02/07/98*

Functionally Dependent User of Facility – A use or facility that cannot perform its intended purpose unless it is located or carried out in close proximity to water. The term includes only docking facilities, port facilities that are necessary for the loading and unloading of cargo or passengers, and ship building and ship repair facilities. The term does not include seafood processing facilities, long-term storage, manufacturing, sales or service facilities. *12/17/10*

Grade – The degree of inclination of a slope, road or other surface *01/01/13*

General Statutes - The General Statutes of the State of Connecticut as they may be amended from time to time.

Geriatric Healthcare Center - A facility offering an integrated continuum of services for elders including independent living to convalescent home to clinics and hospital licensed levels of care. *04/19/97*

Governmental Unit - A facility owned, operated or controlled by the Town of Wallingford, State of Connecticut or the United States of America.

Greenbelt - A strip of undisturbed land boarding along a river, which is to support natural vegetation.

Ground level street-facing area of a building – The entire front 50 ft. floor area of the first floor of a building, which shall be measured from every point of building frontage and extended 50 ft. in a perpendicular direction away from the front property line on which the building fronts. *08/17/18*

Group Day Care Home - A place which offers or provides a program of supplementary care to not less then 7 nor more than 12 related or unrelated children on a regular basis for a part of the 24 hours in one or more days in the week.

Helipad - A takeoff and landing area for helicopters, with no service, fueling, or repair facilities.

Heliport – A takeoff and landing area for helicopters which also provides service, storage, maintenance and repair and fueling for helicopters.

***Highest Adjacent Grade (HA*G)** – The highest natural elevation of the ground surface prior to construction next to the proposed walls of a structure. *12/17/10*

Historic Structure – Any structure that is: (a) Listed individually in the National Register of Historic Places (a listing maintained by the Department of the Interior)or preliminarily determined by the Secretary of the Interior as meeting the requirements for individual listing on the National Register; (b) Certified or preliminarily determined by the Secretary of the Interior as contributing to the historic significance of a registered historic district or a district preliminarily determined by the Secretary to qualify as a registered historic district; (c) Individually listed on a state inventory of historic places in states with historic preservation programs which have been approved by the Secretary of the Interior; or (d) Individually listed on a local inventory of historic places in communities with historic preservation programs that have been certified either: (1) By an approved state program as determined by the Secretary of the Interior or (2) Directly by the Secretary of the Interior in states without approved programs. *12/17/10*

Home Occupation - An accessory use customarily conducted entirely within a residence, which use is incidental and subordinate to the residential use of the dwelling.

Hotel or Motel - A building designed and used primarily for temporary occupancy of transients, which may include the serving of food and rooms for public assembly, which offers or provides accommodations for compensation for more than five persons exclusive of employees domiciled on the premises.

Hydrodynamic Loads - Loads that are caused on buildings or structures by the flow of flood water moving at moderate or high velocity around the buildings or structures or parts thereof, above ground level which allows the free flow of

flood water. Hydrodynamic loads are basically of the lateral type and related to direct impact loads by the moving mass of water, and to drag forces as water flows around the obstruction.

Hydrostatic Loads - Loads that are caused by water, either above or below the ground surface, free or confined, and which is either stagnant or moves at slow velocities up to five feet per second. Hydrostatic pressure at any point is equal in all directions and always is perpendicular to the surface on which they are applied.

Incentive Housing Development – A residential or mixed-use development that is located within the Wallingford Incentive Housing Zone and that complies with the statutory requirements set forth in Connecticut general Statutes §8-13m et.seq., as amended, and §4.23 of these Wallingford Zoning Regulations. *08/23/14*

Incentive Housing Unit – A dwelling unit within an Incentive housing Development that is subject to an incentive housing restriction. *08/23/14*

Kennel - A place, open or enclosed, in which a total of three or more pets over six months old, limited to dogs or cats, are kept overnight for breeding, grooming or medical attention. A pet kept for breeding purposes is defined as one which has not been neutered.

Light Trespass – Light from an artificial light source that is intruding into an area where it is not wanted or does not belong. *02/07/98*

Livestock - Domestic animals limited to horses, cattle, goats, sheep and swine.

Loading Space - An off-street space available for the loading and unloading of commercial vehicles. One loading space shall consist of a minimum vertical clearance of 15 feet.

Lot - A lot or parcel of land on a street and occupied, or capable of being occupied, by a principal building and the accessory building(s) or use(s) customarily incidental to it, including such open spaces as are required by these regulations. In the case of commercial, industrial, public, institutional, or municipal building, a group of buildings under the same ownership may be considered as occupying the same "lot".

Lot of Record - A lot which is part of a subdivision recorded in the office of the Town Clerk, or a lot or parcel described by metes and bounds which has been so recorded prior to the effective date of this regulation or any amendment thereof that would affect such lot.

Lot Area - The gross horizontal area contained within the property lines of a lot.

Lot, Corner - A lot at the intersection of and abutting on two or more streets where the angle of intersection is not more than 120 degrees.

Lot, Depth of - The mean distance from the streetline of the lot to its rear line, measured in the general direction of the sidelines of the lot.

Lot, Frontage - The distance between lot lines measured along the street line. In the case of lots having all or at least 50% of their frontage on a street curve with a radius of 60 ft. or less, required "lot frontage" may be measured as one length at the building line of such lots. *09/12/90*
Lot, Interior - A lot other than a corner lot or through lot.

Lot Line, Front - A dividing line between a street and a lot.

Lot Line, Side - A line or lines bounding a lot which extends from the street to the rear of the property. In the case of corner lots, all lines extending from streets shall be considered either side or rear lot lines. In the case of through lots, all lines extending from streets shall be considered "side lot lines".

Lot, Minimum Width Of - The average horizontal distance between the side lot lines, or, in a case where there is only one side lot line, between such side lot line and the opposite rear lot line or street line.

Lot, Rear - A lot, the major portion of which lies to the rear of another lot intervening between it and a public street, but which has its own frontage of at least 25 feet on such public street.

Lot, Through - A lot other than a corner lot, which has frontage on two or more streets. *04/19/88*

Lowest Floor - The lowest floor of the lowest enclosed area (including basement). An unfinished or flood resistant enclosure, useable solely for parking of vehicles, building access or storage, in an area other than a basement area, is not considered a building's lowest floor. If located in the area inundated by a 100-year flood, such areas shall be designed in accordance with §6.5.C.1.e of these regulations *06/18/00*

Manufactured Home Park or Subdivision – A parcel or contiguous parcels of land divided into two (2) or more manufactured home lots for rent or sale. *12/17/10*

Market Value – The market value of the structure as determined by appraised value of the structure using the cost approach to value method prior to the start of the initial repair or improvement, or in the case of damage, the value of the structure prior to the damage occurring. *12/17/10*

Mean Sea Level (MSL) – The North American Vertical Datum (NAVD) of 1988 or other datum, to which base flood elevations shown on a community's Flood Insurance Rate Map (FIRM) are referenced. *12/17/10*

Mixed-Use Development – A development containing a combination of residential and retail, restaurant and/or office uses. *08/23/14*

Mobile Food Vendor – Any vehicle or conveyance-mounted unit, used to store, prepare, display, or serve food and/or beverages intended for individual portion service and/or available for immediate consumption, sited in a temporary location, and open to the general public. ***Temporary*** – Lasting for only a limited period of time, as further defined in these Regulations.

Mobile Home - A vehicle designed for and used as a residence unit and provided it is: (*1*) used for long-term occupancy and contains sleeping accommodations, a flush toilet and a tub and/or shower bath and kitchen facilities, and has both plumbing and electrical connections attached to outside systems; (*2*) transported on its own wheels or on flatbed or other trailer or detachable wheels; and (*3*) placed on rigid supports at the site where it is to be occupied as a residence complete and ready for occupancy, except for minor and incidental unpacking and assembly operations and connection to utility systems.

Modular Home - Two or more factory-finished units which are transported to the site where they are placed on a permanent foundation, a heating system is installed, siding is attached, and they are joined to make a dwelling unit which is 20 feet or more in width, and provides complete housekeeping facilities for year-round living. A modular home shall be considered a single-family dwelling unit.

Motel - See "Hotel"

New Construction – Structures for which the "start of construction" commenced on or after *August 8, 1978,* the effective date of a floodplain management regulation adopted by a community and includes subsequent improvements to such structures. *06/18/00, 12/17/10*

New Manufactured Home Park or Subdivision – A manufactured home park or subdivision for which the construction of facilities for servicing the lots on which the manufactured homes are to be affixed (including at a minimum, the installation of utilities, the construction of streets, and either final site grading or the pouring of concrete pads) is completed on or after August 8, 1978, the effective date of the floodplain management regulation adopted by the community. *12/17/10*

Non-conforming Lot - A parcel of land that does not meet the area, shape, or frontage requirements for the zoning district in which it is located and which was legally in existence on the effective date these regulations or any amendments thereof.

Non-conforming Structure - A structure which does not conform to one or more of the standards required in the zoning district in which it is located, such as setback, coverage, floor area and height, and which was legally in existence on the effective date of these regulations or any amendments thereof.

Non-conforming Use - A pre-existing, permitted use or activity which has been continuous and is not now allowed under the zoning regulations in the zoning district where such use or activity is located, and which was legally in existence on the effective date of these regulations or any amendments thereof.

Open Space - That portion of the ground space on the same lot as the principal building which is either landscaped, or developed and maintained for recreation purposes. Open Space shall not include those portions of a lot that are utilized for off-street parking or loading, driveway or building purposes.

Parking Garage– Any building or portion of a building used primarily for the parking of vehicles by patrons/residents of the lots on which they are located or other businesses/residences in the vicinity; buildings/structures used for private long-term storage of vehicles that are not in regular use shall be considered "storage" buildings/uses, not parking garages. *08/17/18*

Parking Space - An off-street space available for the parking of one automobile (excluding adequate driveways and aisles). One standard parking space shall consist of a minimum area 9 feet in width and 18 feet in length with a vertical clearance to accommodate one automobile. A handicapped parking space shall constitute an area of 15 feet in width and 18 feet in length with a vertical clearance to accommodate one automobile or van. *08/17/02*

Pawn Shop – An establishment where money is loaned on security of personal property left in pawn and pledged as collateral for the loan and where pawned property may be redeemed by the seller in a fixed period of time or sold to the general public. *08/17/18*

Pet Crematorium – A place having an apparatus for the cremation of deceased household pets. *02/19/11*

Premises - That portion of a lot or structure or building actually in use for the specific purpose or use hereinafter referred to.

Principal Building - A building which accommodates the primary use of a lot and/or site on which it is situated.

Public Transportation – A use or structure that facilitates the transportation of the general public, including but not limited to, bus depots, bus stops, train stations, railroad yards, railroad crossings and the like. *08/23/14*

Recreation Vehicle - A vehicle, towed or self-propelled on its own chassis or attached to the chassis of another vehicle, and designed or used for temporary living, recreation, or sporting purposes. The term recreational vehicle shall include, but not be limited to, travel trailer, pick up campers, camping trailer, converted trucks and buses, boat and skimobile trailers, and similar vehicles.

Restaurant - A public eating place with more than three (3) tables or more than twelve (12) seats. Establishments with no more than three (3) tables and no more than twelve (12) seats shall be considered retail, but shall still be subject to all requirements of applicable Health, Building, Fire and other applicable codes. *05/15/10*

Rooming House - A premises part of which is occupied by the owner of the boarding house as his principal permanent residence, in which rooms are let to 3, but not more than 5, persons. Includes boarding house. *05/19/91 05/01/99*

Sign - Any structure, part thereof or device or inscription attached thereto or painted or represented thereon which is located upon any land or any building or on the outside or inside of a window and which displays or includes any numeral, word, model, banner, emblem, insignia, device, trademark or other representation used as or in the nature of an announcement, advertisement, direction, warning or designation of any person, firm, group, organization, place, commodity, product, service, business, profession, enterprise or industry and including any structure or device built and designed to hold any numeral, word, model, banner, emblem, insignia, device, trademark or other representation, whether or not it is being used for such purpose. But this definition shall not include the flag, emblem, insignia, poster or other display of any nation or political subdivision, including traffic or similar regulatory devices or legal notices, warnings at railroad crossings, signs or tablets which are primarily memorials, or emblems of religious institutions that are attached to buildings.

Sign, Advertising - A sign which directs attention to a business, product, good service , industry or other activity which is sold, offered or conducted at a location other than on the premises upon which such sign is located or to which it is affixed, or which is sold, offered or conducted on such premises only incidentally if at all. Also known as a billboard, as specified in these Regulations. *08/16/19*

Sign, Area of - The entire area within a single perimeter enclosing the extreme limits of writing, representation, emblem or any figure of similar character, together with any material or color forming an integral part of the display or used to differentiate such sign from the background against which such sign is placed. Where a sign has two or more faces, the area of all such faces shall be included in determining the area of the sign, except that where two such faces are placed back-to-back and are at no point more than 2 feet from one another, the area of the sign shall be taken as the area of the larger of the two faces.

Sign, Banner – Any sign of lightweight fabric or similar material that is mounted to a pole or a building. *08/17/02*

Sign, Business - A sign which directs attention to a business, product, good, service, industry, or other activity which is sold, offered, displayed, created, or conducted on the premises upon which such sign is located, or a sign which

serves to identify the name of a building on the premises upon which sign is located. Also known as an on-site sign. *08/16/19*

Sign, Canopy – Any sign that is part of or attached to an awning, canopy, or other fabric, plastic or structural protective cover over a door, entrance, window or outdoor service area. A marquee is not a canopy. *08/17/02*

Sign, Digital – A sign utilizing message technology capable of changing the static message or copy electronically. Also known as, and including, but not limited to: Electronic Message Center (EMC), Electronic Sign, Light-Emitting Diode (LED) sign. *08/16/19*

Sign, Directly Illuminated - A sign designed to give forth artificial light directly (or through transparent or translucent material) from a source of light within such sign.

Sign, Flag – Any fabric, banner, or bunting containing distinctive colors, patterns or symbols used as a symbol of a government, political subdivision or other entity. *08/17/02*

Sign, Ground - A freestanding sign resting upon the ground or attached to it by means of one or more poles or standards.

Sign, Indirectly Illuminated - A sign illuminated with a light so shielded that no direct rays there from are visible elsewhere than on the lot where said illumination occurs.

Sign, Hanging – A sign that is suspended from the underside of a horizontal plan surface and is supported by such surface. *08/17/02*

Sign, Marquee – Any permanent roof-like structure projecting beyond a building or extending along and projecting beyond the wall of the building, generally designed and constructed to provide protection from the weather. *08/17/02*

Sign, Non-illuminated - A sign which is not illuminated, either directly or indirectly.

Sign, Portable – Any sign not permanently attached to the ground or other permanent structure, or a sign designed to be transported, including, but not limited to, signs designed to be transported by means of wheels; A-frame and T-frame signs; menus and sandwich board signs; balloons used as signs; and signs attached to or painted on vehicles parked and visible from the public right-of-way, unless said vehicle is used in the normal day-to-day operations of the business. *08/17/02*

Sign, Projecting – Any sign affixed to a building or wall in such a manner that its leading edge extends more than 12 inches beyond the surface of such building or wall. *08/17/02*

Sign, Temporary – any sign that is used only temporarily and is not permanently mounted. *08/17/02*

Sign, Window – a sign that is attached to the inside of a window or placed inside a building in a manner that the primary view is through a window. Any sign located within a 5 ft. distance from the window and at all visible through a window shall be considered a window sign. Signs attached to the outside of a window are considered wall signs. *06/09/14*

Special Flood Hazard Area - Land within the flood plain of the Town subject to a one percent or greater chance of flooding in any given year as shown on the Wallingford Flood Insurance Rate Map.

Special Permit, Special Exception - A use of property that is basically appropriate to a given zoning district, but which may be incompatible in some locations within the district and, therefore, is not permitted by right everywhere within such district. Such use is allowable only when facts and conditions specified in the regulations as those upon which the use is permitted are found to exist.

Start of Construction – Includes substantial improvement, and means the date the building permit was issued, provided the actual start of construction, repair, reconstruction, rehabilitation, addition, placement, or other improvement was within 180 days of the permit date. The actual "start of" means either the first placement of permanent construction of a structure on a site, such as the pouring of slab or footings, the installation of piles, the construction of columns, or any work beyond the stage of excavation; or the placement of a manufactured home on a foundation. Permanent construction does not include land preparation, such as clearing, grading and filling; nor does it include the installation of streets and/or walkways; nor does it include excavation for a basement, footings, piers, or foundations or the erection of temporary forms; nor does it include the installation on the property of accessory buildings, such as garages or sheds not occupied as dwelling units or not part of the main structure. For substantial improvement, the actual start of construction means the first alteration of any wall, ceiling, floor, or other structural part of a building, whether or not that alteration affects the external dimensions of the building. *06/18/00*

State - State of Connecticut

Story - That part of any building exclusive of cellars, but inclusive of basements, comprised between the level of one finished floor and the level of the next higher finished floor, or, if there be no higher finished floor, then that part of the building comprised between the level of the highest finished floor and the top of the roof beams.

Street - Any dedicated public thoroughfare, which affords principal access to abutting properties. This shall include street, highway, road, lane, avenue, and drive but shall not include unaccepted streets for which the Town has no maintenance responsibility.

Street Line - A line dividing the street and any adjacent lot.

Structure - Anything constructed, formed or erected from an assembly of materials. For the purpose of these regulations, an ornamental wall or a fence over 8 feet high, a tennis court, or a swimming pool shall be deemed to be a "structure".

Substantial Damage – Damage of any origin sustained by a structure whereby the cost of restoring the structure to its before damaged condition would equal or exceed 50 percent of the market value of the structure before the damage occurred. *06/18/00*

Substantial Improvement – Any combination of repairs, reconstruction, alteration, or improvements to a structure taking place over a ten-year period, in which the cumulative cost equals or exceeds fifty percent of the market value of the structure. The market value of the structure should be (1) the appraised value of the structure "using the cost approach to value" prior to the start of initial repair or improvement, or (2) in the case of damage, the value of the structure prior to the damage occurring. For the purposes of this definition, "Substantial Improvement" is considered to occur when the first alteration of any wall, ceiling, floor or other structural part of the building commences, whether or not that alteration affects the external dimensions of the structure. The term does

not, however, include any improvement project required to comply with existing health, sanitary, or safety code specifications which are solely necessary to assure safe living conditions. *06/18/00*

Telecommunications Equipment Building/Structure - The building or structure in which the electronic receiving and relay equipment for a cellular telecommunications facility is housed. *05/18/97*

Tower - A tower is a structure that is intended to support equipment used to transmit and/or receive telecommunications signals. Examples of such structures include monopoles and lattice construction steel structures. The term shall not include amateur radio operators' equipment as licensed by the Federal Communications Commission (FCC). *05/18/97*

Tower Height - A distance from the ground elevation of such tower to the topmost point of the tower including any antenna or other appurtenances. *05/18/97*

Up-lighting – Any source that distributes illumination above a 90-degree horizontal plane. *02/07/98*

Variance – A grant of relief by the Zoning Board of Appeals from the terms of these Zoning Regulations where, because of special conditions, a literal enforcement of the regulations would result in exceptional difficulty or unusual hardship. A variance must still be in harmony with the general intent of the Plan of Conservation and Development and not contrary to the public welfare. *12/17/10*

Vegetable Stand – A table used by a resident for the sale of agricultural products. *5/15/10*

Violation – Noncompliance with any of the standards or requirements contained in these regulations. A structure or other development without required permits is assumed to be in violation until such time as that documentation is provided. *12/17/10*

Water Surface Elevation - Means the height, in relation to *the North American Vertical Datum (NAVD) of 1988*, (or other datum, where specified) of floods of various magnitudes and frequencies in the floodplains of coastal or riverine areas. *04/19/88, 12/17/10*

Waterbody - Any pond, lake or body of standing water, either natural or artificial, excluding swimming pools.

Watercourse - Any river, stream, brook, or other natural or artificial waterway.

Wetlands - Land, including submerged land, not regulated pursuant to §22a-28 to §22a-35, inclusive, which consist of any of the soil types designated as poorly drained, very poorly drained, alluvial, and flood plain by the National Cooperative Soils Survey, as may be amended from time to time, of the Soil Conservation Service of the United States Department of Agriculture. *10/02/94*

Yard - An open space unobstructed from the ground up, on the same lot with a principle building, extending along a lot line or street line and inward to the principal building. The size of a required "yard" shall be measured as the shortest distance between the outer face of the building foundation wall and a lot line or street line. Structures, which are below the finished lot grade, including shelters for nuclear fallout, shall not be deed to occupy required "yards".

Yard, Front - A yard between a principal building and an adjacent street line and extending the entire length of the street line. In the case of a corner lot, the yards extending along all adjacent streets are "front yards". In the case of a

lot other than a corner lot that fronts on more than one street, the yards extending along all adjacent streets are "front yards".

Yard, Rear - A yard between a principal building and an adjacent rear lot line and extending the entire length of the rear lot line.

Yard, Side - A yard between a principal building and an adjacent side lot line, extending from the front yard to the rear yard. In the case of a lot having no street frontage or a lot of odd shape, any yard that is not a front yard or a rear yard shall be considered a "side yard".

Zoning Board of Appeals or ZBA - The Zoning Board of Appeals of the Town of Wallingford.

Zoning Permit - A permit to be obtained from the Planning and Zoning Commission or its appointed agent before the commencement of a new structure of any kind or the commencement of an addition to an existing structure or the change in use of any structure or parcel of land.

§2.3 ILLUSTRATIONS AND GRAPHICS

The following illustrations and graphics are intended to assist the user of the regulations to understand the intent and interpretation of the definitions, terms, requirements, and other aspects of these regulations. They do not supersede the written content of these regulations. The illustrations and graphics are as follows:

A. Visibility at Street Intersections
B. Typical Lots and Yard Areas
C. Measurements of Building Heights, Stories and Basements
D. Design Standards for Parking
E. Typical Arrangement for 90 degree Parking and Loading Area
F. Flood Plain Cross-Section
G. Sediment and Erosion Controls
H. Lot Widths and Depths
I. Special Treatment at Long Driveways
J. Alternate Treatment at Long Driveways

§2.3A VISABILITY AT STREET INTERSECTIONS

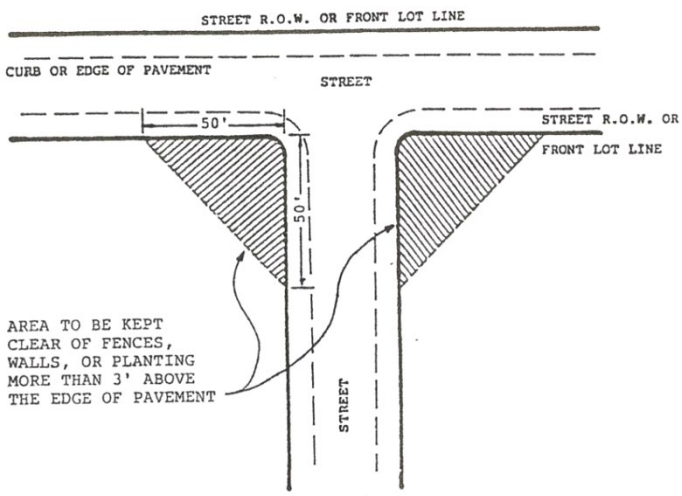

All planting, screening and grades within area shall be so designed and maintained as to assure adequate visibility for approaching pedestrian and vehicular traffic, subject to review and determination by the Town Engineer or the designee of the Town Engineer.
07/17/10

§ 2.3 B TYPICAL LOTS AND YARD AREAS

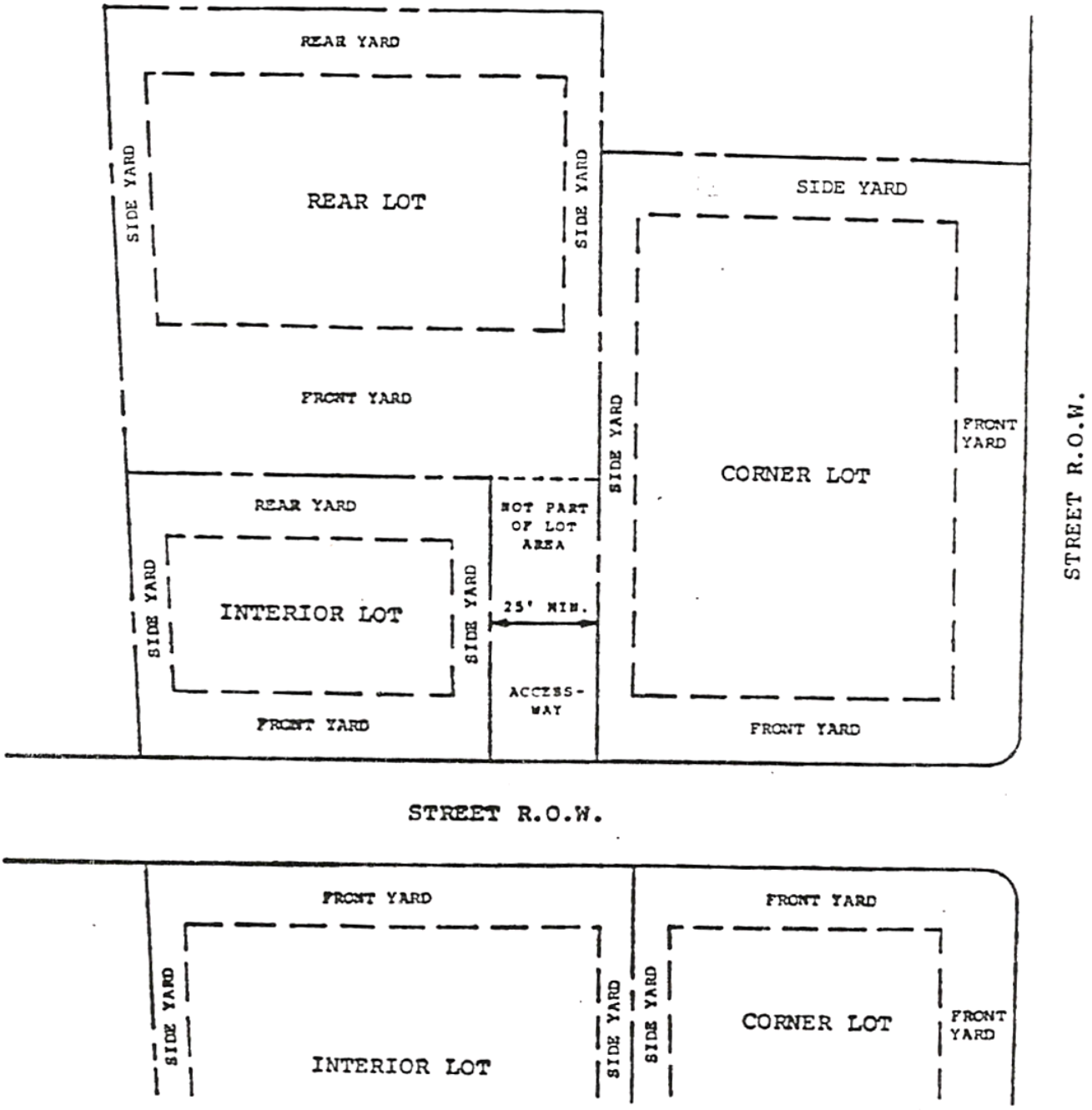

§ 2.3 C MEASUREMENTS OF BUILDING HEIGHTS, STORIES AND BASEMENTS

Effective date: November 19, 1995

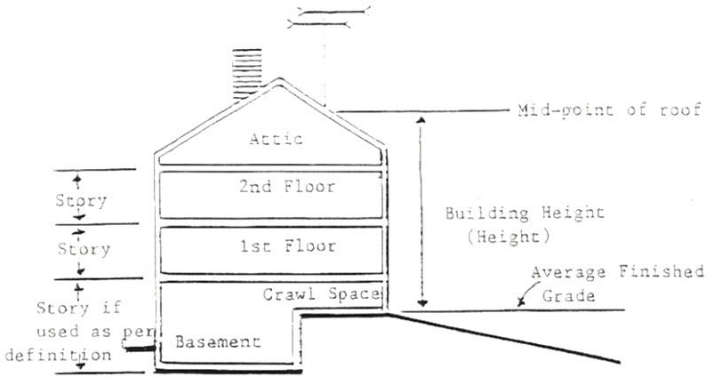

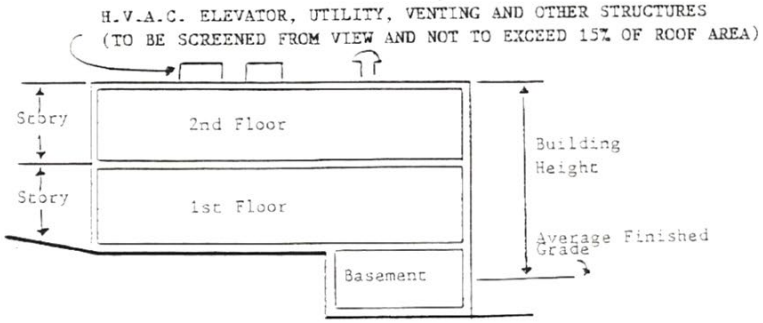

Building Height

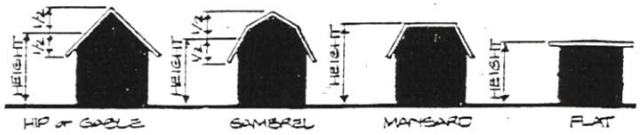

§ 2.3 D

DESIGN STANDARDS FOR PARKING

MINIMUM DIMENSIONS

STANDARD SIZE CARS

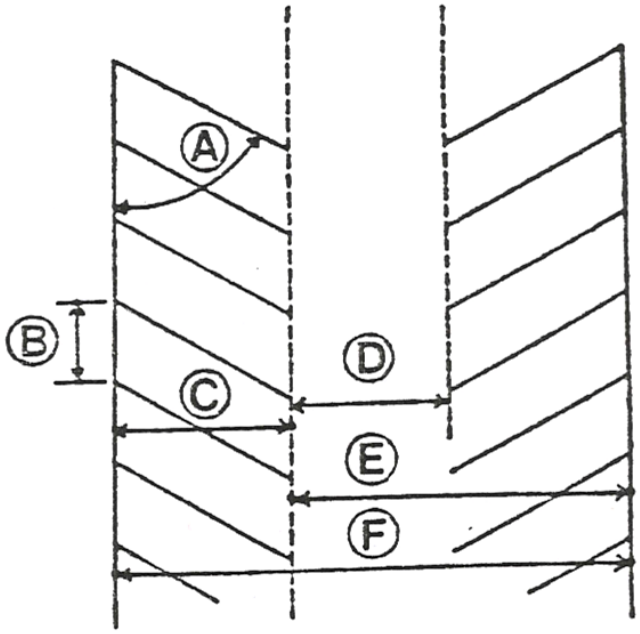

A.	Parking Angle	0°	30°	45°	60°	90°
B.	Curb Length Per Car	21'-0"	18'-0"	12'-9"	10'-5"	9'-0"
C.	Stall Depth	9'-0"	16'-10"	19'-0"	20'-0"	18'-0"
D.	Vehicular Aisle Width	12'-0"*	11'-0"	13'-0"	18'-0"	24'-0"
E.	Lot Width for 1 Row + Driveway	21'-0"**	27'-10"	32'-0"	38'-0"	42'-0"
F.	Lot Width for 2 Rows + Driveway	30'-0"**	44'-8"	51'-0"	58'-0"	60'-0"

* 12' 0" for one way circulation; 24'-0" for two-way circulation

** for two-way circulation, add 12'

§2.3E TYPICAL ARRANGEMENT FOR 90° PARKING AND LOADING AREA

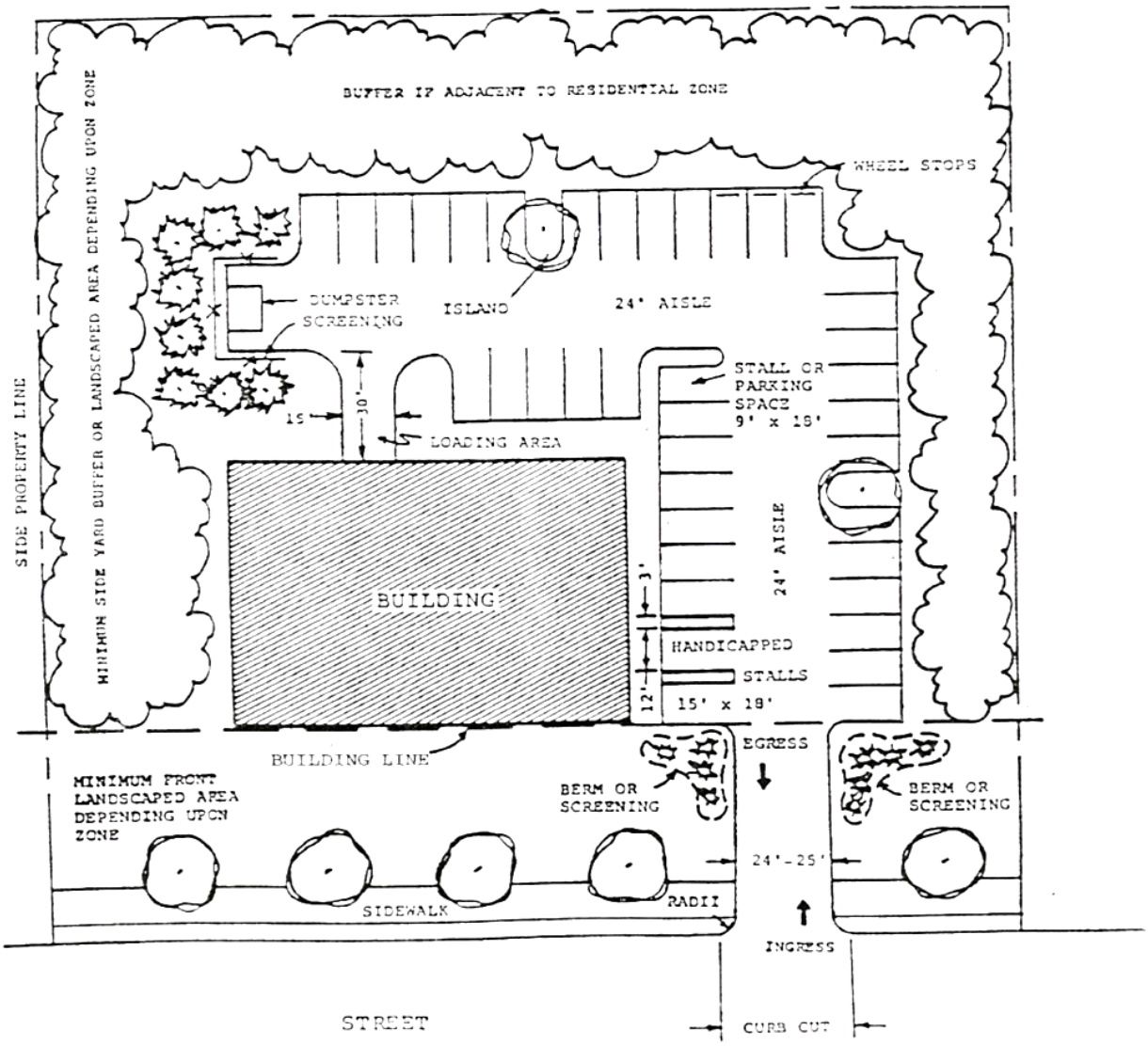

§ 2.1 F FLOOD PLAIN CROSS SECTION

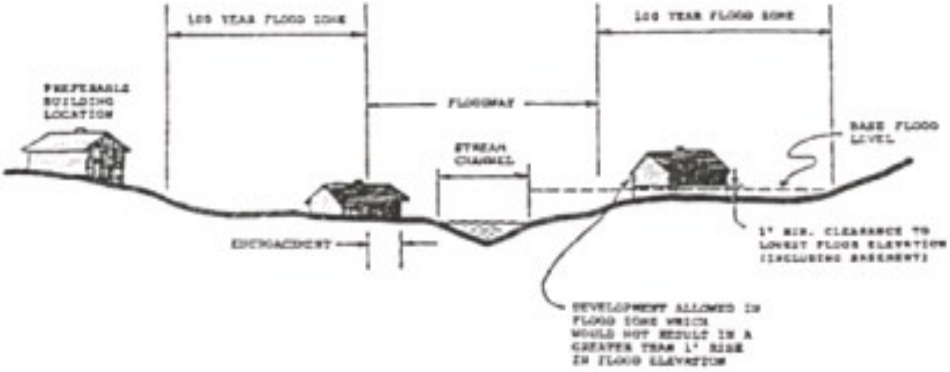

§ 2.3 C SEDIMENT AND EROSION CONTROLS

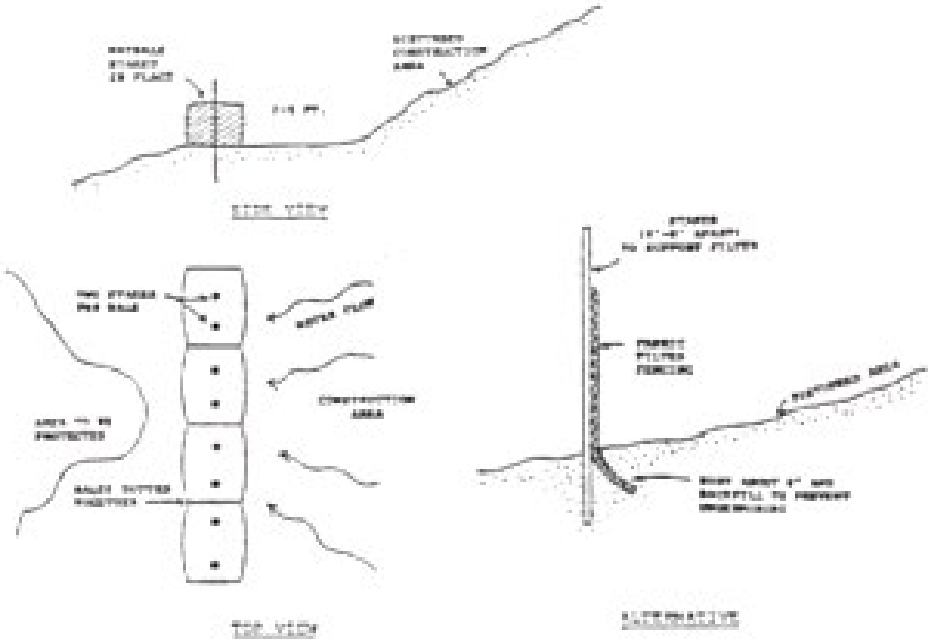

§2.3H LOT WIDTHS AND DEPTHS

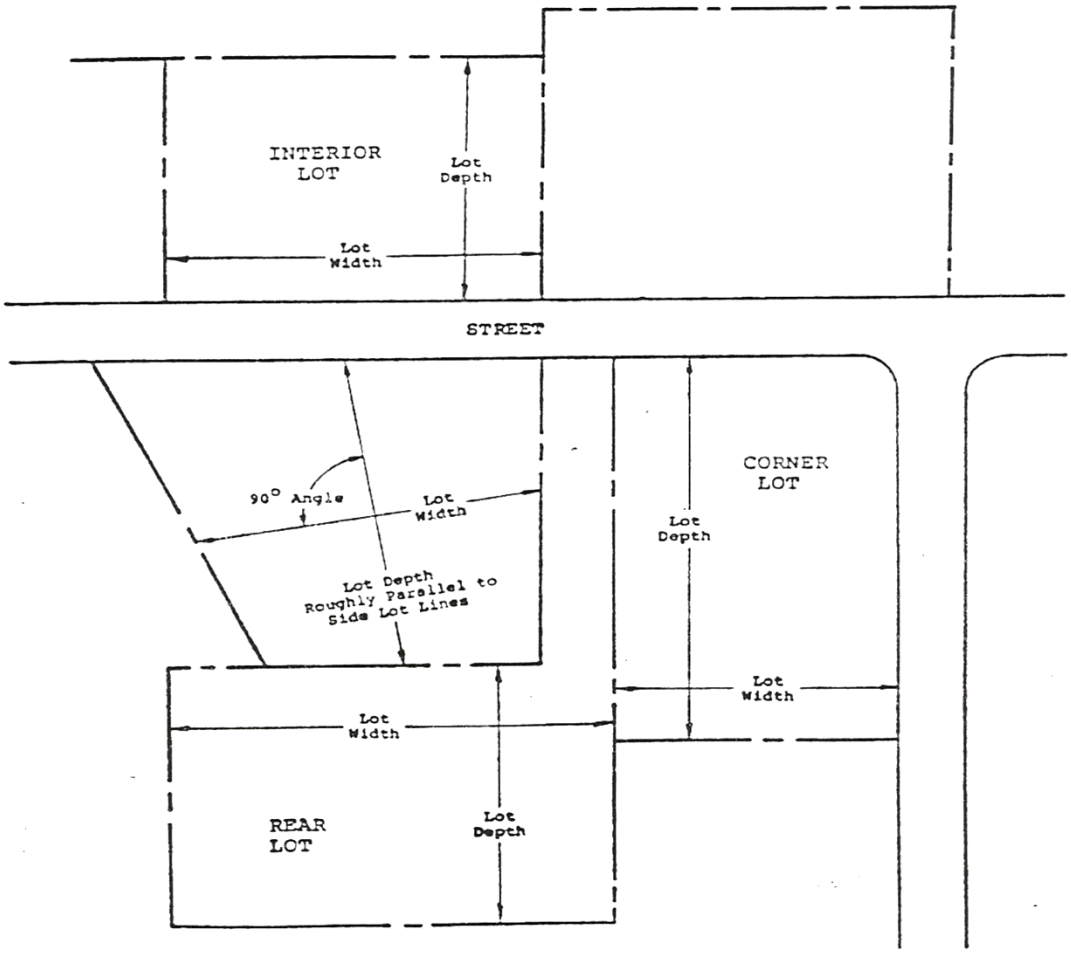

§2.31

Examples of 12' Wide Fire Equipment Driveway Turnarounds

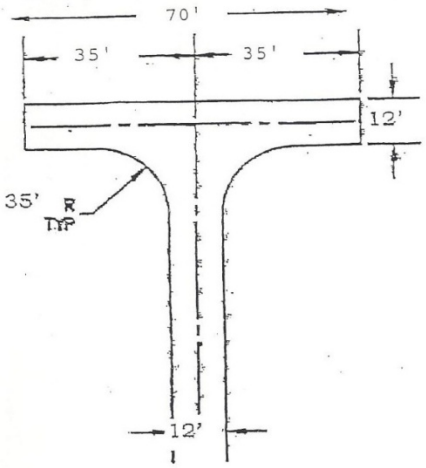

HAMMERHEAD

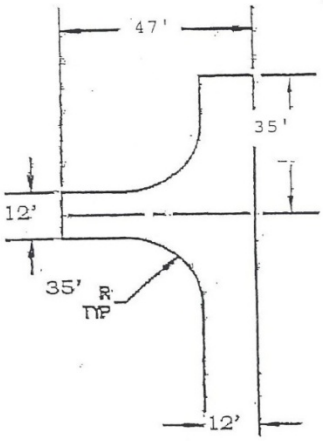

3-POINT SIDE

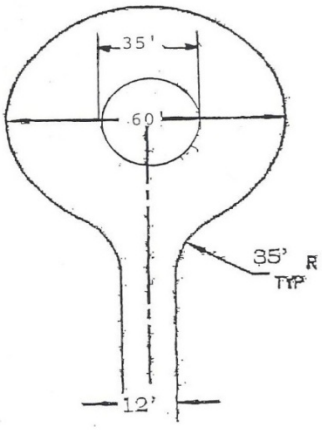

CUL-DE-SAC

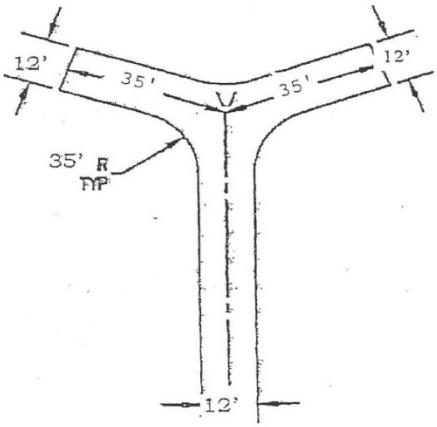

3-POINT WYE

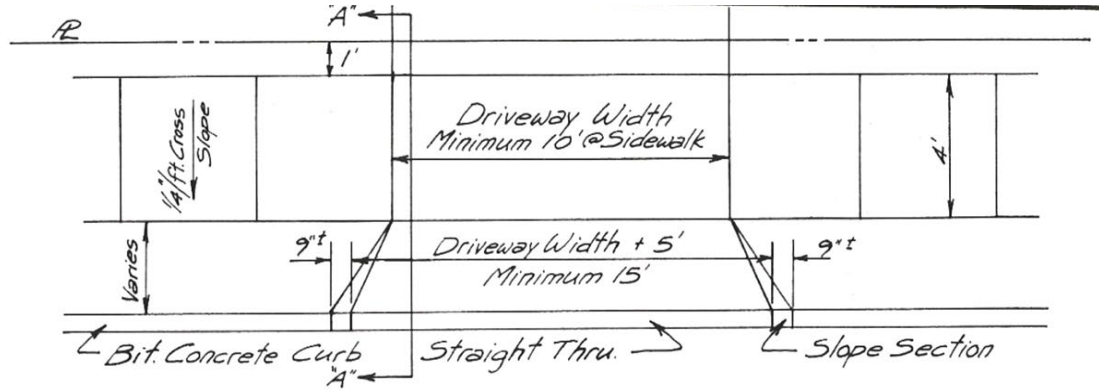

PLAN - Scale 1/4" = 1'-0"

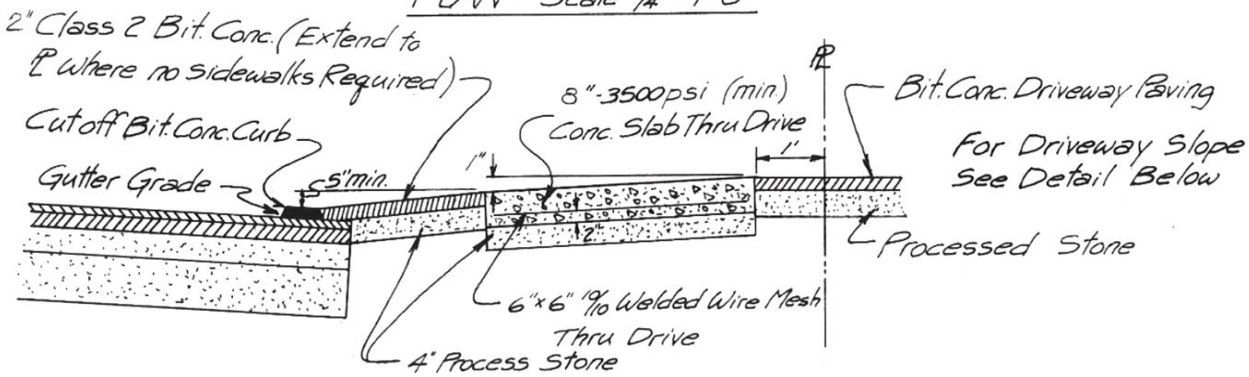

SECTION "A-A" Scale 1/2" = 1'-0"

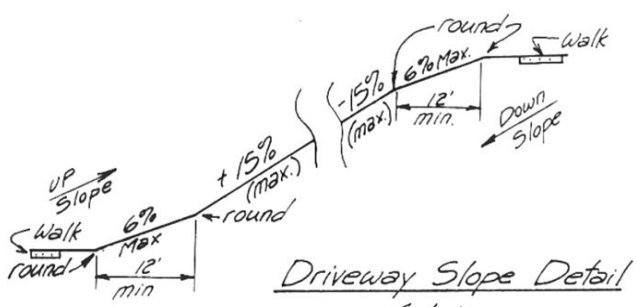

Driveway Slope Detail
(n.t.s.)

STANDARD BITUMINOUS CONCRETE APRON WITH BITUMINOUS CONCRETE CURB + CONCRETE WALK		
Scale: As Noted	Approved by:	Drawn by: W.C.
Date: Feb. 15, 1980		Revised:
DEPARTMENT OF ENGINEERING TOWN OF WALLINGFORD		
		Drawing Number AA-257

2.3.K

Figure 2.3.L

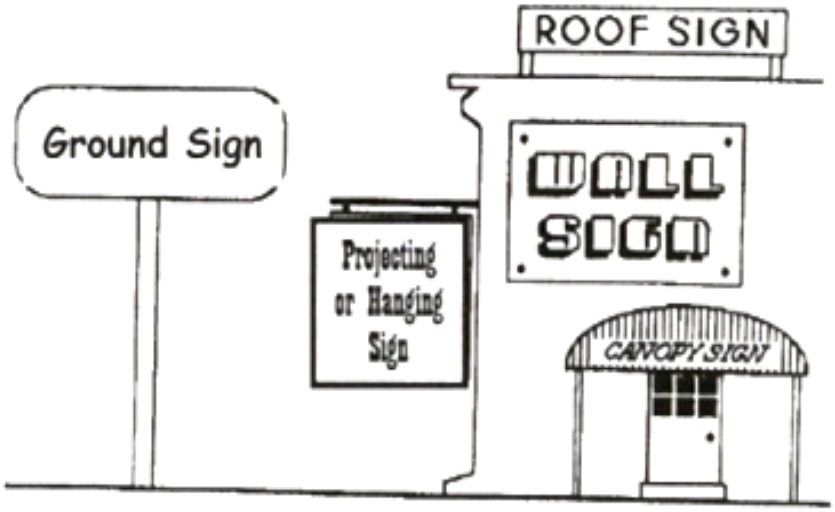

FIGURE 2.3.L: EXAMPLES OF TYPES OF SIGNS

Effective: 8/17/02

ARTICLE III
Zoning Districts and Boundaries

§3.1 ESTABLISHMENT OF DISTRICTS

A. For the purpose of these regulations, the Town is divided into the following districts, the respective symbol of each type of district being set forth opposite its title: *03/14/09*

	Symbol	Title
Residential Districts	R-18	Residence District-18
	R-15	Residence District-15
	R-11	Residence District-11
	R-6	Residence District-6
	HOD	Housing Opportunity District
Multi-family Districts	RM-40	Multi-family District-40
	RM-11	Multi-family District-11
	RM-6	Multi-family District-6
	HOD-MF	Housing Opportunity District-Multi-Family
Rural Residential Districts	RU-120	Rural Residential District-120
	RU-80	Rural Residential District-80
	RU-40	Rural Residential District-40
Commercial Districts	CLB & YLB	Limited Business Districts
	RF-40	Route Five District RF-40
	CA-40	Commercial District CA-40
	CA-12	Commercial District CA-12
	TC	Town Center TC *8/17/18*
	CB-40	Commercial District CB-40
	CB-12	Commercial District CB-12
Industrial Districts	I-5	Interchange District
	DD	Design District
	I-40	Industrial District I-40
	I-20	Industrial District I-20
	IX	Industrial Expansion District
Overlay Districts	APD	Aquifer Protection District
	WPD	Watershed Protection District
	DA	Downtown Apartment District
	QS	Quarry Support District
Special Districts	T-30	Tracy Zone T-30
	IHZ	Incentive Housing Zone Overlay District

B. Each such district may be designated on the Official Zoning Map referred to in the text of these regulations by its symbol only.

§3.2 OFFICIAL ZONING MAP

A. The boundaries of these districts are hereby established as shown on the 4/14/86 Official Zoning Map of the Town of Wallingford, adopted October 30, 1958, effective November 7, 1958, revised January 1986 and which map and any amendments thereof are hereby declared to be part of these regulations.

§3.3 DISTRICT BOUNDARIES AND OFFICIAL ZONING MAP

A. Along right-of-way. Where a district boundary is shown following a street, river, a public right-of-way or a railroad, the boundary is respectively the center line of such street, river or public right-of- way or a line located midway between the main tracts of said railroad and such boundary shall be deemed to be changed automatically whenever the center line of such street or public right-of-way is changed or said main railroad tracks are changed, if the new center line is no farther from the old center line than fifty feet at any point.

B. Map dimensions. Where a dimension is indicated on the Official Zoning Map, such dimension shall control. However, in the absence of a specific dimension being indicated on the map, the dimension shall be determined by the Zoning Enforcement Officer (ZEO) using the map scale.

C. Physical markers. Where a street, highway, railroad or other physical monument or marker on the ground by which a boundary is determined varies from that as shown on the Official Zoning Map, the on-the-ground monument or marker shall control.

D. Lot boundaries. Where district boundaries are indicated as approximately following lot lines of record at the time of adoption of these regulations, these lot lines shall be construed to be such boundaries.

E. Lots lying within more than one district. In all cases where on the effective date of these regulations a district boundary divided a lot, other than a through lot, in one ownership, in a way that 50 percent or more of such lot lies in the less restricted district, the regulations prescribed herein for such less restricted district shall apply to such portion of the more restricted portion of said lot which lies within 30 feet of such district boundary provided that such lot has frontage on a street in the less restrictive district. For purpose of this section, the more restricted district shall be deemed that district which is subject to regulations which prohibit the particular use intended to be made of said lot or which regulations set higher standards with respect to set-back, coverage, yards, screening, landscaping and similar requirements.

ARTICLE IV
Use Regulations

§4.1 RESIDENCE DISTRICTS (R-18, R-15, R-11, R-6)

A. Purpose - To allow single-family residences on lots from 6,250 sq.ft. to 18,000 sq. ft. to encourage moderate to high density residential development and related purposes in areas primarily served by municipal water and sewerage facilities.

B. The following uses are permitted subject to approval of a Zoning Permit in accordance with §8.3:

1. One single-family dwelling per lot.
2. Any community residence that houses six (6)or fewer mentally retarded persons and necessary staff persons and that is licensed by the State. *10/16/05*
3. One manufactured home per lot, subject to the following:
   a. Each home must be at least 22 feet wide at its smallest dimension.
   b. Each home must meet the Federal Manufactured Home Construction and Safety Standard.
   c. Each home shall have a full concrete foundation. *04/18/89*
4. Structure or rooftop mounted antennas, subject to the requirements and procedures listed in §6.25. *05/18/97*
5. Any child-care, residential facility that houses 6 fewer children with mental or physical disabilities and necessary staff persons and that is licensed by the State. *10/16/05*
6. Any community residence that houses 6 or fewer persons receiving mental health or addictive services and necessary staff persons paid for or provided by the Department of Mental Health and Addictive Services and that has been issued a license by the Department of Public Health under the provisions of §19a-491 of the CT General Statutes, if a license is required. *10/16/05*

C. The following permitted uses require approval of a Special Permit in accordance with §7.5:

1. Educational, religious or philanthropic use by a non-profit corporation or governmental unit, excluding, however, correctional institutions. *10/02/94*
2. Club.
3. Governmental buildings, facilities and uses.
4. Public utility buildings and facilities.
5. Municipal Housing for the elderly, when sponsored by the Housing Authority of the Town of Wallingford and financed by Local, State or Federal funds subject to the following conditions and safeguards:
   a. Each lot shall have a minimum area of 5 acres.
   b. The minimum land area per dwelling unit shall be 5,000 square feet.
   c. The lot shall be served by public sewerage and public water supply.
   d. The minimum distance between buildings shall be 25 feet.
   e. Each property line shall be paralleled by a landscape screen at least six feet wide, planted to a mixture of evergreen and deciduous trees and shrubs, which shall be maintained in proper order.
   f. Minimum yard dimensions shall be governed by the zone in which the property lies, or the following, whichever is greater:

Front yard - 40 feet

Side yard - 30 feet
Rear yard - 30 feet

g. Road standards: All interior roads shall have a minimum paved width of 28 feet except that cul-de-sac roads of less than 800 feet in length, may have a minimum paved width of 24 feet. All roads shall be constructed in accordance with standards specified in the Town's Subdivision Regulations.
h. No parking spaces shall be closer than 20 feet to any residential unit. No parking space shall be more than 50 feet from the unit which it serves. No parking shall be within 20 feet of the property boundary.
i. Any community building or open space area shall be as centrally located as possible.
j. A minimum of 10% of the site shall be designated and set aside as park and recreation land.
k. Parking shall be provided in accordance with §6.11, except that in congregate housing, the parking spaces may be reduced to .5/unit.

6. Golf course and associated clubhouse facilities.
7. Uses in this zoning district generating 100 peak-hour vehicle trips or more using the standards set forth in the most recent edition of Trip Generation, ITE, or a more accurate source, if available, subject to the following: *04/16/94 08/10/96 10/18/03*
   a. Submission of a traffic impact analysis containing present roadway conditions, existing roadway capacity, existing and projected traffic volumes (ADT, Peak A.M. and Peak P.M.), existing and projected volume capacity ratios, existing and projected levels of service, existing and proposed sight lines, site generated traffic and traffic distributions, and traffic accident experience.
   b. A traffic impact analysis will be required: *05/17/88*
      1. For an addition to an existing use, which use is now under the provisions of this section, and
      2. When an addition to an existing use brings that use under the provisions of this section.
      3. The traffic impact analysis shall cover the entire use, not merely the addition.
   c. No traffic impact analysis or Special Permit will be required for an addition to an existing Special Permit use if the addition generates 25 peak-hour vehicle trips or less. This provision shall be permitted to be used one time over the life of the use on a specific site.
   d. In all cases in which the Commission feels that a peer review of the applicant’s traffic impact analysis is warranted, the applicant shall be required to reimburse the Town for the cost of the peer review. This payment shall be made to the Town prior to the decision by the Commission on the application.
8. Open Space Planned Residential Development, per §4.3. *09/18/90*
9. Affordable housing sponsored by a philanthropic, non-profit housing organization. *12/15/91*
10. Open Space Subdivisions as per §6.8. *09/19/92*
11. Adaptive Re-use to Multi-Family as per §6.16. *09/19/92*
12. Excavation and filling of land as per §6.10. *09/19/92*
13. Deleted 11/17/07
14. Garaging or hangaring of aircraft, only at a municipal airport, subject to the following conditions and safeguards: *11/19/02*
   a. No de-icing procedures or operation will occur in or in the vicinity of said hangars or garages;
   b. no aircraft maintenance, other than preventive maintenance authorized under Part 43 of Federal Aviation Regulations shall be performed in said hangar or garage;
   c. no hazardous materials as defined by the Connecticut Department of Environmental Protection shall be stored in said hangar or garage;

d. no fueling of said aircraft shall be done in said hangar or garage.

15. Convalescent homes, provided that the lot shall contain not less than 120,000 sq.ft., provided further that any building so used shall not be less than 40 feet from any streetline, 20 feet from any sideline and 30 feet from any rear line. Building coverage for the expansion of any existing facility shall not exceed the existing established percentage coverage or the coverage requirements set forth in §5.1A, whichever is higher and parking in accordance with the parking regulations. A minimum of 15 feet of front landscaping shall be required. *10/17/04*

D. The following uses require a Special Exception from the Zoning Board of Appeals in accordance with §9.1:

1. Customary home occupations, including professional and service occupations, subject to the following conditions:
   a. Such occupation shall only be conducted at an approved residence by resident occupants of the residential building; other employees of the business may conduct business in a location other than the approved residence, as permitted. *01/12/15*
   b. No more than 500 square feet of interior floor area, or the first floor of the building, whichever is smaller, shall be used for such purposes, including any storage or other area associated with the home occupation. *01/12/15*
   c. The livable floor area for the residents shall remain at least as large as that required of residences.
   d. No more than two (2) clients, patrons, associates, students or pupils of the home occupation shall be permitted on the property at any one time in addition to the resident person(s) conducting the use. *01/12/15*
   e. The residential character of the building shall not be changed.
   f. The Home Occupation shall be conducted entirely within the residential unit.
   g. Off-street parking shall be provided in accordance with §6.11.
   h. No signage associated with, or referencing the name or activity of, the home occupation shall be permitted. *01/12/15*
   i. No retail sales shall be permitted.
   j. The accessory use shall not create offensive noise, odors, smoke, heat, dust, vibration or other objectionable conditions which might adversely affect the residential character of the surrounding area. *01/12/15*
2. Boarding house.
3. Windmills and similar energy conservation system that utilize the power of the wind provided:
   a. Each lot shall have a minimum area of 40,000 square feet or as required by the applicable zone, whichever is greater.
   b. No windmill or similar structure shall exceed 50 feet in height.
   c. No windmill or similar structure shall be located in any required yard.
   d. The windmill or similar structure shall be set back from all lot lines and from the principal building a distance of at least equal to the height of the windmill or similar structure.
4. Ground-mounted solar panels as well as satellite dishes and dish type antennae in excess of two feet in diameter provided they:
   a. Shall not exceed 15 feet in height or diameter, including all supporting structures.
   b. Shall not be located within any required front yard for a principal structure.

c. Shall be fully screened from any adjacent property line and the street line.
d. Shall be permanently anchored in compliance with the State Building Code.
e. Technical literature shall be submitted to supplement any proposed application for the above. *11/19/95*

5. Nursery school, child day care center, group day care home, subject to the following:
   a. The facility shall have an approved license from the State of Connecticut.
   b. No play apparatus shall be located in a required front or sideyard.
   c. Not more than 15% of the area of the lot shall be occupied by building.
   d. Each lot shall have a minimum area of 18,000 square feet, or 1,000 square feet for each child based on enrollment capacity, or as required by the applicable district, whichever is greater.
6. Cemeteries.
7. Private garages exceeding size limitations as provided in §6.2.A.1 *05/15/15*
8. Private stables for a maximum of two horses or ponies exceeding 300 sq.ft. in area and 10 feet in height. *10/02/94*
9. Bed and Breakfast Establishments subject to the following conditions:
   a. Any structure in which such establishment shall be located shall be a detached single family dwelling constructed before 1940.
   b. The structure shall be owner occupied, and the special exception shall become void if the structure shall cease to be owner occupied. All applications under this section shall include a listing of all the rooms in the house and which rooms shall be used as guest bedrooms and which shall be used as the owner's bedroom(s). The maximum number of rooms shall be used as guest bedrooms shall be a total of 5.
   c. The residential and historic character and existing architectural detail of the structure shall not be changed.
   d. Additions to the structure to accommodate the bed and breakfast activity shall be limited to not more than 20% of the total floor area of the dwelling. After the initial application is approved and the use is established, any subsequent physical addition to the structure or further expansion of the use within the existing structure, beyond the rooms designated as guest bedrooms in the original application, shall require a new application under this section to approve the increased use.
   e. The applicant shall present evidence that the proposed use would be in conformance with the requirements of the Wallingford Health Department as to public sewerage and public water supply.
   f. Off-street parking shall be provided in accordance with §6.11. All such off-street parking shall be substantially screened with a landscape screen at least six feet wide, planted with a mixture of evergreen and deciduous trees and shrubs, which shall be maintained in proper order. Such off-street parking shall be located in such a way to minimize its impact upon adjacent properties.
   g. Signs shall be permitted in accordance with §6.9.
   h. Meals may be served only to the occupants of the dwelling and overnight guests at the bed and breakfast.
   i. Additional emergency exits required by the Fire Marshal and/or the Building Inspector shall be designed for the side and/or rear yard and shall be made to appear to be part of the original structure.
   j. Rear yard landscaping shall comprise at least 25% of the rear yard area. *05/01/99*

E. The following permitted uses require Site Plan Approval in accordance with Article VII:

1. Accessory Apartments as per §6.15.
2. Multi-family conversions as per §6.22. *09/19/92*
3. Farms, farming and agricultural operations including greenhouses, subject to:
   a. Must contain a minimum of 30 acres of contiguous land.
   b. All buildings on the site shall not exceed a coverage of 20%
   c. Minimum building setbacks from all property lines shall be 100 feet.
   d. Truck parking and/or loading areas shall be a minimum of 50 feet from any property boundary.
   e. A 10 foot landscaped buffer shall be required abutting any existing residential dwelling units. *03/04/01*

F. The following accessory uses are permitted:

1. Private swimming pools, subject to the following conditions: *06/17/04*
   a. No swimming pool shall be located in a required front yard.
   b. No swimming pool shall extend within less than ten(10) feet of a property line, nor within less than 10 feet from the wall of a dwelling unit.
   c. Decks that are attached to and a part of an above-ground pool shall not be permitted in the required front yard or within 10 feet of a side or rear property boundary. Concrete or similar patios around in-ground pools shall not extend into the required front yard, but there is not a minimum setback for concrete or similar patios in side or rear yards.
   d. All swimming pools shall be fenced as required by the Building Code.
2. Tennis courts and outdoor recreational uses, subject to the following conditions:
   a. Such uses shall not be lighted.
   b. Shall be a minimum of 10 feet from a property line.
   c. Shall be located in a side or rear yard.
3. Private garages and other accessory buildings subject to §6.2 and the following: *05/15/15*
   a. All garages and/or carports attached to a single-family home shall be attached to each other and not be located at opposite sides of a house. *03/15/08, 09/12/92 & 10/02/94*
4. Gardening and the raising of crops.
5. The storage of one commercial vehicle, boat or camper as per §6.12. *09/19/92*
6. A business or professional office when conducted on the premises entirely by mail and/or telephone and when there is no pedestrian, automobile or other vehicular traffic necessary for its conduct with the exception of normal residential traffic activity by the residents, provided the use meets all the requirements as follows:
   a. No persons, other than family members residing on the premises, shall be engaged in the conduct of the office or enterprise.
   b. The office or enterprise shall be in harmony with the residential character of the premises and neighborhood, and shall have no outside storage or display windows, nor shall there be any evidence of the operation outside the dwelling unit.
   c. The floor area used for the conduct of the office or enterprise shall not exceed 250 sq.ft.
   d. No industrial manufacturing or processing equipment of any type shall be allowed.
7. Private stables for the keeping of horses or ponies for the exclusive use of the occupant of the principal building on lots having an area of 120,000 sq.ft. or more, and provided that not more than two horses or

ponies are kept. Stables shall be located at least 30 feet from any street or property line and shall not exceed 300 sq. ft. in area and 10 feet in height except as per §4.1.D.8. *10/02/94*

8. Signs in accordance with the requirements of §6.9.
9. Off-street parking in accordance with the requirements of §6.17.
10. Family Flock of Hens - The keeping of a family flock of hens (limit 12), subject to the following conditions:
    a. Such use shall be confined to an enclosure having a total area of less than 400 sq. ft.
    b. Any structure used for this purpose shall be located not less than 10 feet from any lot line and 100 feet from any street line.
11. Pigeon and dove cotes, subject to: *05/16/92*
    a. Each lot shall not exceed 60 breeding birds.
    b. Pigeons and doves shall be housed in a structure meeting the yard requirements of the principal building in the district in which it is located.
    c. All pigeons shall be registered with a national pigeon organization by use of a seamless numbered leg band.
    d. Cotes shall not exceed 300 sq. ft.
    e. All grain and food stored for the keeping of pigeons and doves shall be kept in vermin-proof containers.
12. Family Day Care Center *02/05/95*
13. Satellite receiving dishes of two feet or less in diameter not located within a required front yard for a principal structure. *11/19/95*
14. Residential hobby honey-bee keeping in compliance with CGS §22-89 through §22-90,subject to the following: *02/17/17*
    a. All honey bee colonies shall be registered with the Connecticut Agricultural Experiment Station, Office of the State Entomologist as required by CGS §22-89. Hives will be subject to inspection at any time by the Office of State Entomology and/or a Wallingford Zoning Enforcement Officer, in accordance with this regulation.
    b. Beekeeping and production of honey under this section shall not be used for commercial purposes.
    c. All colonies shall be oriented away from property lines and into the property on which they are located, and provide a clear flight path over the property on which the colonies are located.
    d. Maximum number of colonies on a property shall be as follows:
        i. ¼ acres or less – 2 colonies including up to 2 nuclei
        ii. More than ¼ acre to ½ acre – 4 colonies and up to 3 nuclei.
        iii. More than ½ acre to 1 acre – 6 colonies and up to 6 nuclei
        iv. More than 1 acre to 1½ acres – 8 colonies and up to 5 nuclei
        v. More than 1½ acres – 10 colonies and up to 6 nuclei
    e. Colonies shall be located away from road, walkways, or rights of way as follows:
        i. 4 colonies or less – minimum of 25 feet from all property lines
        ii. More than 4 colonies – minimum of 50 feet from all property lines
    f. Where a colony is located less than 50 feet from any property line, appropriate barriers (i.e. fence, wall dense vegetation) a minimum of 6 feet in height shall be installed between the colonies and the property line to restrict the flight pattern of the bees.
    g. A colony shall be a maximum of 6 feet in height.
    h. Appropriate provision of water for the bees shall be made on the property on which the colony/colonies are located shall be accessible via a clear path from the bee colonies, and shall be a distance from any property line equal to the requirement defined in §4.1.F.14.e.i and §4.1.F.14.e.ii.
    i. Hives shall be regularly monitored for disease, including mites, and shall be appropriately treated as applicable.

j. If any of the above requirements cannot be complied with on a particular property/site, beekeeping shall not be permitted on that property/site.

G. The following uses are permitted and do not require any zoning approval:

1. Mobile Food Vendor provided all of the following conditions are met:
   a. Will not be located/parked on a property for more than ten (10 consecutive days; AND
   b. Will not be located/parked on a property for more than twenty (20)days in any 365-day period. *06/14/14*

§4.2 RURAL DISTRICT (RU-160, RU-120, RU-80, RU-40) *01/13/86*

A. Purpose - To allow single-family residences at low density while recognizing and encouraging the continuance of agricultural operations.

B. The following uses are permitted subject to approval of a Zoning Permit in accordance §8.3:

1. Any use permitted in §4.l.B. *10/02/94*
2. Farms, farming and agricultural operations.
3. Cold storage plants when situated on a farm containing not less than 10 acres if used for storage of local produce or supplies used on local farms only.
4. The maintenance, repair, manufacture and storage of equipment, implements, machinery and vehicles used in connection with an agricultural or forestry operation on the same premises or on premises under the same ownership. *09/19/89*

C. The following permitted uses require approval of a Special Permit in accordance with §7.5:

1. Same as in a §4.l.C *10/02/94*
2. Farm Store, subject to the following conditions: *05/15/10*
   a. The store shall comply with the building setbacks of the zoning district in which it is located.
   b. The store shall be located on land that is part of the farm store owner's farm.
   c. A majority of products for sale shall be agricultural and horticultural products produced on land farmed by the farm store's owner.
   d. At least 90% of items for sale shall be Connecticut grown agricultural and horticultural products.
   e. On-site parking shall be provided at 1 parking space/150 sq.ft.
3. A private hospital, convalescent home, sanatorium or clinic, provided that the lot shall contain not less than 6,000 square feet for each patient sleeping accommodation, but excluding hospitals for the insane, provided further that any building so used shall be not less than 100 feet from any property or street line.
4. The sawing and storage of timber, subject to the following conditions: *10/02/94*
   a. No such operation shall be located on a lot containing less than 5 acres.
   b. No sawmill shall be located within 500 feet of any residence except a residence on the same premises.
5. A geriatric healthcare center, provided that…
   a. The lot contains not less than 10 acres.
   b. The lot shall contain not less than 2500 sq.ft. for each sleeping accommodation. *01/19/08*
   c. Any building so used shall not be less than 100 feet from any property or street line *04/19/97*
   d. Minimum lot coverage by gross first floor area shall not exceed twenty percent (20%) of the total lot area. *01/19/08*
   e. Parking in accordance with Section 6.11 except that independent living units shall require only one space for each unit. *01/19/08*
6. An assisted living center provided that… *11/29/97*
   a. The lot contains not less than ten acres and a minimum of 200 feet of road frontage;
   b. The lot shall contain not less than 3000 square feet for each assisted living residence unit;

c. Any building developed for such purpose shall be located not less than 50 feet from any property or street line: If deemed necessary by the Commission, minimum setbacks may be increased to one hundred feet from any property or streetline;
d. Minimum lot coverage by gross first floor area shall not exceed 15% of the total lot area;
e. A landscaping buffer shall be required alongside and rear property boundaries. The purpose of the buffer shall be:
   i. To protect property values by preserving existing vegetation and the planting of new materials;
   ii. To provide privacy from visual intrusion, light ,dirt, and noise;
   iii. To improve the appearance of development within the Town.

In cases where topography, natural features, existing vegetation or compatible land uses do not make a larger buffer necessary, the minimum shall be:

District	**Setback From Streetline**	**Setback From Other Property**	**Minimum Buffer**
RU-120	50	50	20
RU-80	50	50	20
RU-40	50	50	15

The set back shall be observed along street lines which shall be landscaped per §6.14.C. However, the buffering required under §6.14.d is not required. Signs are permitted within the front set back area.

Additional buffering may be required by the Commission to meet the purposes of this section. Existing development on abutting property shall not be deemed as automatically requiring additional buffering.

f. The minimum open space area required in an assisted living center use in a residential zone shall be:

District	**Minimum % of Open Space**
RU-120	85
RU-80	80
RU-40	70

g. Architectural Design:

The architectural design, scale and mass of buildings and other structures, including, among other elements: The exterior building material, color, roof-line, and building elevations shall be residential in character so as to harmonize and be compatible with the neighborhood, to protect property values in the neighborhood and to preserve and improve the appearance and beauty of the community.

i. Pitched roof buildings shall be encouraged.
ii. Roof-top mechanical equipment, other than solar energy panels shall be concealed from all sides.
iii. Dwelling unit facades should be designed to avoid a barracks or dormitory appearance. Staggered or off-set unit facades and/or varied unit façade materials should be considered. Staggered or off-set unit fronts shall not be less than 5 feet in depth.

iv. Buildings should be designed and located on the site so as to retain the existing topography and natural features of the land to the greatest extent possible.

v. Each structure shall consist of no more than 15 units.

h. All utilities within the site shall be underground.

i. The site shall be served by sanitary sewer and municipal water.

j. Parking shall be provided at .5/unit.

k. Facilities for both active and passive recreations shall be provided.

7. Private Elementary School

8. Deleted – 03/14/09

D. The following uses require a Special Exception from the Zoning Board of Appeals:

1. Same as in §4.1.D. *10/02/94*

E. The following uses require Site Plan Approval in accordance with Article VII:

1. Accessory Apartments (See §6.15)
2. Livery and boarding stables, riding schools and veterinary hospitals, provided that they are on lots of not less than five acres and that no dogs therein are kept in any building or enclosure within 150 feet of any property line. *11/03/07*
3. Farm Wineries, subject to:
   a. Shall be on lots of not less than 10 acres
   b. Shall provide parking as §6.11. Impervious cover materials shall not be permitted for parking areas or driveways on property located within the watershed. Parking landscaping as required by §6.14.E may be modified by the Commission to preserve scenic views. *09/11/06 07/03/16*
   c. All compost piles shall be a minimum of 200 ft. from any body of water, watercourse or wetland.
   d. Shall provide a plan acceptable to the Water and Sewer Division and/or Health Department, for waste disposal, including pretreatment of wash down and processing wastewater.
   e. If applicable, shall comply with the requirements of the Watershed Protection District.
   f. No parking or loading areas shall be within 100 feet of a property boundary.
   g. No sale of wine either by retail or by the glass may occur before 11:00 a.m. or after 8:00 p.m. from Monday through Saturday and before 11:00 a.m. or after 6:00 p.m. on Sunday, or in accordance with applicable State and Federal law, whichever is more restrictive. Grappa and brandy shall only be permitted to be sold for off-premise consumption; however, tastings of grappa and brandy are permitted on premises. *07/03/16*
   h. Signage must conform to Section 6.9 of the Wallingford Zoning Regulations. *07/03/16*
   i. The following accessory activities are permitted as part of a farm winery use: *07/03/16*
      I. Bulk sales and distribution of products produced at the farm winery as permitted under Connecticut General Statutes, as amended.
      II. Retail sales by glass or bottle;
      III. A tasting room;
      IV. Product tastings and winery tours;
      V. Incidental service and sale or other pre-packaged non-alcoholic beverages and cold pre-packaged food for consumption on the premises limited to that permitted by a

Class 1 Food Service License under the Health Code;

VI. Incidental sale of souvenirs and winery-related items provided that any area designated for such sales shall not exceed the letter of ten percent (10%)of the Gross Floor Area of the Farm Winery Building or 150 square feet,

VII. Events and promotions as provided herein, and

VIII. Any person or group of persons may bring food for consumption on the premises.

j. Events and Promotions: A farm winery may conduct events as follows: *07/03/16*

I. Up to four (4) public special promotional events during a calendar year, and

II. Once-a-month private reserved events with an attendance limited to the permitted seating capacity of the tasting room.

III. All events allowed under subdivisions (I) and (II) shall end at or before 8:00 p.m. from Monday through Saturday and 6:00 p.m. on Sunday. Live music is permitted at each such event and may be amplified when performed indoors and shall not be amplified when performed outdoors. Catered food may be offered indoors at the reserved once-a-month events. The winery may not charge a facility rental fee for any such event.

IV. Regardless of the events or activities otherwise permitted hereunder, a winery shall conduct no activity that generates more than 100 peak hour vehicles trips as contemplated in Sections 4.2.C.1 and 4.1.C.7 hereof without a Special Permit for such event.

V. The farm winery shall notify the Planning & Zoning Department of the date and nature of the event at least 30 days prior to the event.

k. Music: A farm winery may provide live and recorded music as follows: *07/03/16*

I. Commercially available licensed background music during all business hours up to 8:00 p.m. from Monday through Saturday and 6:00 p.m. on Sunday in the tasting room. Live music no more than twice a week between 11:00 and 8:00 p.m. Live music may be amplified or unamplified when inside and shall not be amplified when performed outside.

II. The farm winery shall not charge for admission in connection with any musical performance.

III. The winery shall at all times comply with the restrictions of the Wallingford Noise Ordinance for the zone in which it is located. It is not the intent of this regulations to consider the above events, promotions, and music to be exempt farm activities under the Noise Ordinance.

07/03/16

4. Farm Stand, subject to the following condition: *05/15/10*

a. The stand shall sell only agricultural and horticultural products produced on the owner's farm.

b. The stand shall be located on land zoned to permit a farm and farmed by the owner of the farm stand.

c. The stand shall be set at least 20 ft. back from the streetline to provide off-street parking.

d. The stand shall be open no more than six (6) months in any calendar year.

e. At least three (3) parking spaces shall be provided.

F. The following accessory uses are permitted:

1. Same as in a Residence District, except a private stable for up to two horses or ponies shall be permitted on a lot with a minimum of 80,000 sq.ft.
2. Vegetable stand subject to the following conditions: *05/15/10*
    a. The stand shall only sell agricultural products grown on the premises.
    b. The table shall not exceed 15 sq.ft.
    c. One parking space shall be provided off the traveled way.

G. All areas zoned RU-18, a zone to be discontinued, shall be governed by the requirements contained in §4.1 as if those properties were zoned R-18.

H. The following uses are permitted and do not require any zoning approval:

1. Mobile Food Vendor provided all of the following conditions are met:
    a. Will not be located/parked on a property for more than ten (10) consecutive days; AND
    b. Will not be located/parked on a property for more than twenty (20) days in any 365 day period. *06/14/14*

§4.3 OPEN SPACE PLANNED RESIDENTIAL DISTRICT (OSPRD) *09/18/90*

A. Purpose: The OSPRD is intended:

1. To expand the choice of housing in the Town from individual lots and structures to the planning and development of larger areas with groups of structures erected as a coordinated entity and;
2. to preserve and make available open space for conservation, preservation of natural resources, farmland, recreation, wildlife habitat, and maintaining the rural New England flavor of Wallingford.

B. Permitted Uses:

1. One-family, two-family, and multi-family dwellings in principal buildings subject to the following conditions.
2. Related accessory buildings, structures, and uses, limited to the following:
   a. Private garages.
   b. Maintenance and utility shops for the upkeep and repair of buildings, structures and equipment on the site.
   c. Recreation facilities limited to the use of individuals living on the premises.
   d. Manager's office.
   e. Utility building and structures.

C. Objectives:

In addition to the Special Permit objectives contained in §7.5.B, the following criteria must be met before a Special Permit shall be approved:

a. The development shall provide a creative approach to the development of residential land.
b. The development shall provide a more desirable environment than would be possible through the strict application of the minimum requirements of the Zoning and Subdivision Regulations.
c. The development will be an efficient use of land resulting in smaller networks of utilities and streets.
d. The development shall be capable of existing in harmony with surrounding residential areas.

D. Development Standards: The following standards and requirements shall apply to any development in OSPRD.

1. The minimum parcel size shall be:

District	Acres
RU-120	25
RU- 80	25
RU- 40	15
R- 18	15
R- 15	5
R- 11	5
R- 6	5

2. The total number of proposed dwelling units shall be determined by dividing the total acreage of the tract minus,
   a. 50% of all wetland and watercourse areas,
   b. land with slopes in excess of 25%
   c. floodway and floodplain areas,

d. land subject to easement for above-ground utility transmission lines, by the conventional minimum lot size for the district in which the tract is located *09/15/01*

3. The parcel shall be serviced by sanitary sewers and public water supply.
4. Buffer - A landscaping buffer area shall be required along all property boundaries and along all street lines. The purpose of the buffer shall be:
   a) To protect property values by preserving existing vegetation and the planting of new materials.
   b) To provide privacy from visual intrusion, light, dirt, and noise.
   c) To improve the appearance of development within the Town.

   In cases where topography, natural features, existing vegetation or compatible land uses do not make a larger buffer necessary, the minimum shall be:

District	Setback from Streetline	Setback from Other Property	Minimum Buffer
RU-120	50	50	20
RU- 80	50	50	20
RU- 40	50	50	15
R - 18	40	20	15
R - 15	20	20	10
R - 11	20	15	10
R - 6	10	10	5

   Additional buffering may be required by the Commission to meet the purposes of this section. Existing development on abutting property shall not be deemed as automatically requiring additional buffering.

5. Open Space:

   A. The Commission recognizes that one of the Town's assets is its varied and unique physical features and open space. It is necessary to preserve these natural assets by encouraging development techniques which will accomplish the objective of preserving this asset. Open Space in an OSPRD must accomplish one of the following objectives:

      1. Preserving land as common open space to preserve or enhance the appearance, character, and natural beauty of an area;
      2. preserving land to serve park and recreation needs;
      3. preserving land for purposes of conserving natural resources;
      4. preserving and protecting particular areas and terrain having qualities of natural beauty of historic interest;
      5. protecting streams, rivers, and ponds so as to avoid flooding, erosion, and water pollution;
      6. preserving and protecting agricultural areas as a historic use of land in Wallingford;
      7. preserving open space to replicate a traditional New England green;
      8. providing larger open space areas by laying out new open space contiguous to existing open space on adjacent parcels.

B. The minimum open space area in an OSPRD shall be:

District	Minimum % Open Space
RU-120	85
RU- 80	80
RU- 40	70
R - 18	65
R - 15	60
R - 11	55
R - 6	50

C. Area within the following distance of buildings, parking lots, driveways, and roads shall not be used in calculating compliance with the minimum open space requirements contained in these regulations:

District	Minimum Open Space Setback (Ft.)
RU-120	30
RU- 80	30
RU- 40	20
R - 18	15
R - 15	15
R - 11	10
R - 6	5

D. The Commission may permit the Open Space (or a portion thereof) to be subdivided into a separate, contiguous lot and conveyed to an entity that is organized and empowered to own, operate and maintain land for open space purposes permitted under these regulations, including the Town of Wallingford. Nothing herein shall prohibit a previously approved OSPRD from seeking modification of its approval in accordance with this provision. *01/14/01*

E. Open space may only be used for purposes approved by the Planning and Zoning Commission during the approval process. In OSPRD's, those uses, in most cases, shall be limited to lawn and garden areas shown on the original site plan and areas to be left in their natural state adjoining the developed areas. Any use of open space not approved by the Commission shall be a violation of these regulations. *10/18/03*

6. Architectural Design:

The architectural design, scale and mass of buildings and other structures, including, among other elements: The exterior building material, color, roof-line, and building elevations shall be residential in character so as to harmonize and be compatible with the neighborhood, to protect property values in the neighborhood and to preserve and improve the appearance and beauty of the community.

a. Pitched roofed buildings shall be encouraged.
b. Roof-top mechanical equipment, other than solar energy panels shall be concealed from all sides.
c. Dwelling unit facades should be designed to avoid a barracks or dormitory appearance. Staggered or off-set unit facades and/or varied unit facade materials should be considered. Staggered or off-set unit fronts shall not be less than 5 feet in depth.
d. Buildings should be designed and located on the site so as to retain the existing topography and natural features of the land to the

greatest extent possible.

e. Each structure shall consist of no more than six units.

7. Utilities:
   a. All utilities within the site shall be underground.
8. Height - Building height shall not exceed 30 feet.
9. Parking - In addition to the requirements of §6.11, all required parking shall be within 75 feet of the units. A driveway behind a garage shall not count as one of the required parking spaces.

   A maximum of ten consecutive parking spaces may be provided in one line without interruption. If more than ten parking spaces are to be provided, there shall be a minimum landscaped area of 20 feet by 20 feet between each continuous line of ten parking spaces. This requirement shall not apply to buildings not used for dwelling unit purposes. Parking shall not be permitted in any required setback area.

   At least 30% of the minimum required parking spaces shall be provided in garages or carports.

10. Sidewalks - A sidewalk on at least one side shall be required along any access road connecting with an existing public road and along the major interior roads of the development unless, in the opinion of the Commission, such sidewalks are not necessary. Sidewalks shall be continuous through the development.
11. Recreation Facilities - Swimming pools, tennis courts, and other recreational facilities shall be as centrally located as possible, protected with a suitable and safe fence, located at least 25 feet from any dwelling unit and shall not be located within any of the required setbacks.
12. Exterior Lighting - Exterior lighting shall be provided and maintained by the property owner at all access points to streets, parking areas, building entrances and elsewhere for the safety of vehicular and pedestrian traffic. All exterior lighting shall be low-level except for required street lights and tennis courts. The glare from light sources shall be shielded from roads and abutting properties.
13. Refuse Areas - Refuse collection areas shall be provided and conveniently located for all buildings. The collection areas shall be screened and supplied with covered receptacles.
14. Storm Drainage - All storm drainage facilities shall be designed and constructed in accordance with Town Standards, subject to the approval of the Town Engineer.
15. Road Standards - All interior roads shall have a minimum paved width of 26 feet except that cul-de-sac roads of less than 800 feet in length, which are not required to be curbed, may have a minimum paved width of 22 feet. All roads shall be constructed in accordance with standards specified in the Town's Subdivision Regulations except that curbs may be waived at the discretion of the Commission. All interior roads shall remain private roads and will not be accepted as Town roads.
16. Fire Hydrants - Fire hydrants shall be installed and located within 500 feet of each dwelling unit.
17. Storage - All residential buildings shall have an area equal to 10% of the total floor area as separate storage space. This storage space may be closets.
18. Additions and modifications after approval: *12/18/04*
    The Commission approves each OSPRD as a planned development and is concerned over both the architectural design of each unit and the relationship of each building in the development to other buildings in the development. The Commission considers OSPRD developments to be entirely different types of neighborhoods than those developed under traditional subdivision and zoning standards. In an OSPRD, no

individual lots are created; all land is owned in common. As such, the following policies shall apply:

a. Accessory apartments are not permitted.
b. Additions, including rooms, sun porches and garages to individual units are not permitted.
c. Accessory buildings and swimming pools for the exclusive use of individual units are not permitted.
d. Enlarged decks are not permitted.
e. Only decorative fencing shown on the site plan, owned and maintained by the homeowners' association and approved by the Planning and Zoning Commission, is permitted.

§4.4(A) CENTRAL LIMITED BUSINESS DISTRICT (CLB) *01/20/91*

Purpose - To allow for the limited and controlled use of land for professional offices and multi-family dwelling units (11/17/07) while maintaining the residential character of the structures and properties within the district.

A. The following uses are permitted:

1. Any use permitted in §4.1.B. *10/18/01*

B. The following uses are permitted subject to Site Plan Approval and the following conditions except as per §4.4.(A)C.4: *03/17/91*
   a. The residential character of existing buildings and additions must be maintained as per §4.4.E.
   b. The gross floor area of any dwelling unit (11/17/07) must be a minimum of 300 sq. ft.
   c. No exterior change shall be made to the existing front of any existing principal dwelling. Additions into side yard areas will be permitted.

1. Professional, business, medical and dental offices, funeral homes, credit unions and multi-family dwelling units (11/17/07) located in existing structures. *09/17/05*
2. Bed and Breakfast Inns subject to the following conditions:
   a. The structure shall be owner occupied or have an innkeeper on premise All applications under this section shall include a listing of all the rooms in the house and which rooms shall be used as guest bedrooms and which shall be used as the owner's/innkeeper's bedroom(s). The maximum occupancy shall be sixteen (16) guests. *03/17/12 10/16/09*
   b. The residential and historic character and existing architectural detail of the structure shall not be changed.
   c. Additions to the structure to accommodate the bed and breakfast activity shall be limited to not more than 20% of the total floor area of the dwelling. After the initial application is approved and the use is established, any subsequent physical addition to the structure or further expansion of the use within the existing structure, beyond the rooms designated as guest bedrooms in the original application, shall require a new application under this section to approve the increased use.
   d. The applicant shall present evidence that the proposed use would be in conformance with the requirements of the Wallingford Health Department as to public sewerage and public water supply.
   e. Off-street parking shall be provided in accordance with §6.11. All such off-street parking shall be substantially screened with a landscape screen at least six feet wide, planted with a mixture of evergreens and deciduous trees and shrubs, with shall be maintained in proper order.
   f. Signs shall be permitted in accordance with §6.9.
   g. Meals may be served only to the occupants of the dwelling and overnight guests at the bed and breakfast.
   h. Additional emergency exits required by the Fire Marshal and/or the Building Inspector shall be designed for the side and/or rear yard and shall be made to appear to be part of the original structure.
   i. Rear yard landscaping shall comprise at least 25% of the rear yard area. *10/18/01*
3. Additions to any existing structure for any use listed in §4.4(A)B.1. *03/14/98*

C. The following permitted uses require approval of a Special Permit in accordance with §7.5:

1. A municipal building, telephone exchange, transformer substation, sewer or water pumping station, with no outside service yards or outside storage of supplies.
2. Educational, religious, or philanthropic use by a non-profit corporation or governmental unit, excluding correctional institutions. *10/02/94*
3. Uses in this zoning district generating 100 peak hour vehicle trips or more using the standards set forth in the most recent addition of Trip Generation, ITE, or a more accurate source, if available, subject to the following: *04/16/94 08/10/86 10/18/03*
   a. Submission of a traffic impact analysis containing present roadway conditions, existing roadway capacity, existing and projected traffic volumes (ADT, Peak A.M. and Peak P.M.), existing and projected volume ratios, existing and projected levels of service, existing and proposed sight lines, site generated traffic and traffic distributions, and traffic accident experience.
   b. A traffic impact analysis will be required: *05/17/96*
      1. For an addition to an existing use, which use is now under the provisions of this section, and
      2. When an addition to an existing use brings that use under the provision of this section.
   c. No traffic impact analysis or Special Permit will be required for an addition to an existing Special Permit use if the addition generates 25 peak hour vehicle trips or less. This provision shall be permitted to be used one time over the life of the use on a specific site.
   d. In all cases in which the Commission feels that a peer review of the applicant's traffic impact analysis is warranted, the applicant shall be required to reimburse the Town for the cost of the peer review. This payment shall be made to the Town prior to the decision by the Commission on the application.
4. Multi-family dwelling (11/17/07) conversions on any property where a legal non-conforming use exists at the time of application regardless of whether or not such a conversion results in a reduction or elimination of the legal non-conforming uses. *03/17/91*
5. Adaptive Re-use to Multi-Family as per §6.16. *09/19/92*
6. Excavation and filling of land as per §6.10. *09/19/92*
\ 7. Deleted 11/17/07

D. The following accessory uses are permitted:

1. Accessory uses customarily incidental to a permitted use.
2. Signs in accordance with §6.9.O.3.
3. Off-street parking in accordance with §6.11. Parking must be located to the rear of the building.
4. Landscaping and buffer areas in accordance with §6.14.
5. Accessory buildings as per §6.2.B. *09/19/92*

E. Architectural Design - The scale and mass of buildings and other structures, including, among other elements, the exterior building material, color, roofline, and building elevations shall be of such character as to harmonize and be compatible with other buildings in the district, and to preserve and improve the appearance and beauty of the community.

F. The following uses require a Special Exception from the ZBA:

1. Child Day Care Centers.
2. Group Day Care Homes.
3. Nursery Schools.

G. The following uses are permitted and do not require any zoning approval:
   1. Mobile Food Vendor provided all of the following conditions are met:
      a. Will not be located/parked on a property for more than ten (10) consecutive days; AND
      b. Will not be located/parked on a property for more than twenty (20) days in any 365-day period. *06/14/14*

§4.4(B) YALESVILLE LIMITED BUSINESS DISTRICT (YLB) *01/20/91*

Purpose - To allow for the limited and controlled use of land for professional offices and multi-family dwelling units (11/17/07) while maintaining the residential character of the structures and properties within the district.

A. The following uses are permitted subject to approval of a Zoning Permit in accordance with §8.3.:

   1. Any use permitted in §4.1.B. *10/18/01*

B. The following uses are permitted subject to Site Plan Approval in accordance with Article VII and the following conditions, except as per §4.4(B)C.5: *03/17/91*
   a. The existing character of all residential structures and additions should be retained as per §4.4.E.
   b. Conversions of existing commercial structures and additions should reflect the residential character of the district as per §4.16.E.
   c. The gross floor area of any dwelling unit (11/17/07) must be a minimum of 300 square feet.

   1. Professional, business, medical and dental offices, funeral homes and multi-family dwelling units (11/17/07) located in existing structures, except as required by §C.5 below. *03/15/92*
   2. Bed and Breakfast Establishments subject to the following conditions:
      a. The structure shall be owner occupied and the site plan approval shall become void if the structure shall cease to be owner occupied. All applications under this section shall include a listing of all the rooms in the house and which rooms shall be used as guest bedrooms and which shall be used as the owner's bedroom(s). The maximum number of rooms shall be used as guest bedrooms shall be a total of 5.
      b. The residential and historic character and existing architectural detail of the structure shall not be changed.
      c. Additions to the structure to accommodate the bed and breakfast activity shall be limited to not more than 20% of the total floor area of the dwelling. After the initial application is approved and the use is established, any subsequent physical addition to the structure or further expansion of the use within the existing structure, beyond the rooms designated as guest bedrooms in the original application, shall require a new application under this section to approve the increased use.
      d. The applicant shall present evidence that the proposed use would be in conformance with the requirements of the Wallingford Health Department as to public sewerage and public water supply.
      e. Off-street parking shall be provided in accordance with §6.11. All such off-street parking shall be substantially screened with a landscape screen at least six feet wide, planted with a mixture of evergreens and deciduous trees and shrubs, with shall be maintained in proper order.
      f. Signs shall be permitted in accordance with §6.9.
      g. Meals may be served only to the occupants of the dwelling and overnight guests at the bed and breakfast.
      h. Additional emergency exits required by the Fire Marshal and/or the Building Inspector shall be designed for the side and/or rear yard and shall be made to appear to be part of the original structure.
      i. Rear yard landscaping shall comprise at least 25% of the rear yard area. *10/18/01*
   3. CA uses as listed in §4.5 subject to the following:
      a. They are located in a structure or that portion of a structure which contained a legally established CA use at the time of adoption of

these regulations.

b. The CA use of the structure or the portion of a structure has never been abandoned.

c. The GFA of the structure dedicated to a CA use may expand by 25% of that which existed at the time of adoption of these regulations.

d. Any substantial improvement of a structure shall require that the structure comply with the provisions of §4.4.E.

e. Any structure or portion of a structure containing a professional or business office on the effective date of these regulations shall not be changed to another CA use.

4. Building additions which do not exceed 50% of the existing GFA for professional, business, medical and dental offices, funeral homes and apartments. *03/15/92*

C. The following permitted uses require approval of a Special Permit in accordance with §7.5:

1. A municipal building, telephone exchange, transformer substation, sewer or water pumping station, with no outside service yards or outside storage of supplies.
2. Educational, religious, or philanthropic use by a non-profit corporation or governmental unit, excluding correctional institutions. *10/02/95*
3. Uses in this zoning district generating 100 peak hour vehicle trips or more using the standards set forth in the most recent edition of Trip Generation, ITE, or a more accurate source if available, subject to the following: *04/16/94 08/10/96 10/18/03*

   a. Submission of a traffic impact analysis containing present roadway conditions, existing roadway capacity, existing and projected traffic volumes (ADT, Peak A.M. and Peak P.M.), existing and projected volume capacity ratios, existing and projected levels of service, existing and proposed sight lines, site generated traffic and traffic distributions, and traffic accident experience.

   b. A traffic impact analysis will be required: *05/17/88*

      1. For an addition to an existing use, which use is now under the provisions of this section, and
      2. When an addition to an existing use brings that use under the provisions of this section.
      3. The traffic impact analysis shall cover the entire use, not merely the addition.

   c. No traffic impact analysis or Special Permit will be required for an addition to an existing Special Permit use if the addition generates twenty-five (25) peak hour vehicle trips or less. This provision shall be permitted to be used one time over the life of the use on a specific site.

   d. In all cases in which the commission feels that a peer review of the applicant's traffic impact analysis is warranted, the applicant shall be required to reimburse the Town for the cost of the peer review. This payment shall be made to the Town prior to the decision by the Commission on the application.

4. New office and multi-family dwelling units (11/17/07) located on the east side of Main Street on properties with existing principal buildings subject to: *03/17/91*

   a. lot size must be at least 22,500 sq. ft.

   b. building must be set back 125 feet from the streetline. *10/23/91*

5. Multi-family dwelling unit (11/17/07) conversions on any property where a legal non-conforming use exists at the time of application regardless of whether or not such conversion results in a reduction or elimination

of the legal non-conforming uses. *03/17/91*

6. Building additions which exceed 50% of the existing GFA for professional, business, medical and dental offices, funeral homes and multi-family dwelling units (11/17/07). *03/15/92*
7. Adaptive Re-use to Multi-Family as per Section 6.16. *09/19/92*
8. Excavation and filling of land as per Section 6.10. *09/19/92*
9. Deleted 11/17/07

D. The following accessory uses are permitted:

1. Accessory uses customarily incidental to a permitted use.
2. Signs in accordance with §6.9.O.3 except that existing CA uses will be permitted wall signage as per §6.9.O.4.
3. Off-street parking in accordance with §6.11. *08/17/18*
4. Landscaping and buffer area in accordance with §6.14.
5. Accessory buildings as per §6.2.B. *09/19/92*

E. Architectural design - The scale and mass of buildings and other structures, including, among other elements, the exterior building material, color, roofline, and building elevations shall be of such character as to harmonize and be compatible with other buildings in the district, and to preserve and improve the appearance and beauty of the community.

F. The following uses require a Special Exception from the Zoning Board of Appeals in accordance with §9.1:

1. Child Day Care Centers.
2. Group Day Care Homes.
3. Nursery Schools.
4. Customary home occupations, including professional and service *04/18/09* occupations, subject to the following conditions:
   a. Such occupation shall be conducted by resident occupants of the residential building except that no more than two persons not a resident of the building may be employed.
   b. No more than 500 square feet, or the first floor of the building, whichever is smaller, shall be used for such purposes.
   c. The livable floor area for the residents shall remain at least as large as that required of residences.
   d. No more than four students or pupils at any one time shall be permitted in addition to the resident person and/or employee conducting the use.
   e. The residential character of the building shall not be changed.
   f. The occupation shall be conducted entirely within the residential unit.
   g. Off-street parking shall be provided in accordance with §6.11.
   h. Signs shall be permitted in accordance with §6.9.
   i. No retail sales shall be permitted.

G. The following uses are permitted and do not require any zoning approval:

1. Mobile Food Vendor provided all of the following conditions are met:
   a. Will not be located/parked on a property for more than ten (10) consecutive days; AND
   b. Will not be located/parked on a property for more than twenty (20) days in any 365-day period. *06/14/14*

§4.5 COMMERCIAL (CA) DISTRICTS

A. Purpose - To allow general commercial and office development in designated areas located on or near major streets.

B. The following uses are permitted subject to Site Plan Approval in accordance with Article VII:

1. Educational, religious, or philanthropic use by a non-profit corporation or governmental unit, excluding correctional institutions. *10/02/94*
2. Boarding and rooming houses.
3. Offices and financial institutions.
4. Restaurants and other food service facilities with or without a liquor permit.
5. Funeral homes.
6. Self-service clothes cleaning establishments.
7. Theaters for indoor picture projection or dramatic or musical productions.
8. Hotels and motels with not less than six units, provided that the lot area is equal to not less than 2,000 sq.ft. for each sleeping accommodation.
9. Stores and shops where goods are sold and services are rendered primarily at retail, including: *10/02/94*
   a. Bakery, catering establishment or confectionery store.
   b. Barber shops, beauty parlors, manicurists, sun tanning salons, massage therapists, and similar personal services.
   c. Book or stationary store.
   d. Laundry, cleaning and dyeing agencies.
   e. Clothing, tailoring, dressmaking.
   f. Drugs, toilet articles, dry goods and notions.
   g. Florist shop, garden and farm supplies or equipment.
   h. Furniture, interior decorating, hardware, radios, electrical or household appliances, sporting goods.
   i. Gift, antique or art or jewelry store.
   j. Groceries, fruit, vegetables or meats.
   k. Rental equipment if stored indoors.
   l. Retail package store, the sale of wine, beer, or spirituous liquors.
   m. Shoes and shoe repairing.
   n. Dog and cat grooming.
   o. Printing and publishing establishments in which the floor area shall not exceed 2,000 sq. ft.
10. Clubs.
11. Cafes and taverns subject to: *11/13/04*
    a. Permanent outdoor patios shall be surrounded by a five-foot tall white vinyl fence with the finished side facing out.
    b. Square footage within the patio shall be included as café/tavern square footage for parking purposes.
12. Temporary construction offices.
13. Museums or art galleries.
14. Governmental buildings, facilities and uses.
15. Public utility buildings and facilities.
16. Dance studios. *05/17/88*
17. Veterinary hospitals for small animals, provided that the animals housed overnight are kept in a building, and that it does not provide boarding. *10/11/89*
18. Adult Uses as per §6.20. *09/19/92*
19. Business and Trade Schools *09/14/96*
20. Deleted *05/15/99*

C. The following permitted uses require approval of a Special Permit in Accordance with §7.5:

1. Billiard and pool parlors, bowling alleys, skating rinks, and other indoor places of public recreation operated as a business. *10/02/94*
2. Residential dwelling units, subject to the following:
   a. Shall not be located on the first floor unless the entire first floor is being legally used for residential purposes at the time of application. *05/19/91 03/19/05*
3. Temporary mobile office.
4. Uses in this zoning district generating 100 peak hour vehicle trips or more using the standards set forth in the most recent edition of Trip Generation, ITE, or a more accurate source, if available, subject to the following: *04/16/94 08/10/96 10/18/03*
   a. Submission of a traffic impact analysis containing present roadway conditions, existing roadway capacity, existing and projected traffic volumes (ADT, Peak A.M. and Peak P.M.), existing and projected volume capacity ratios, existing and projected levels of service, existing and proposed sight lines, site generated traffic and traffic distributions, and traffic accident experience.
   b. A traffic impact analysis will be required: *05/17/88*
      1. For an addition to an existing use, which use is now under the provisions of this section, and
      2. When an addition to an existing use brings that use under the provisions of this section.
      3. The traffic impact analysis shall cover the entire use, not merely the addition.
   c. No traffic impact analysis or Special Permit will be required for an addition to an existing Special Permit use if the addition generates 25 peak hour vehicle trips or less. This provision shall be permitted to be used one time over the life of the use on a specific site.
   d. In all cases in which the Commission feels that a peer review of the applicant's traffic impact analysis is warranted, the applicant shall be required to reimburse the Town for the cost of the peer review. This payment shall be made to the Town prior to the decision by the Commission on the application.
5. Adaptive Re-use to Multi-Family as per §6.16. *09/19/92*
6. Excavation and filling of land as per §6.10. *09/19/92*
7. Deleted 11/17/07

D. The following accessory uses are permitted:

1. Automatic amusement devices.
2. Signs in accordance with §6.9.
3. Off-street parking and loading in accordance with §6.11.except as noted below *01/13/17*

Remainder of Section deleted ***08/17/18***

4. Accessory buildings as per §6.2.B. *09/19/92*
5. Outside storage as per §6.12. *09/19/92*
6. Satellite receiving dishes of two feet or less in diameter not located within a required front yard for a principal structure *11/19/95*

E. The following uses require a Special Exception from the ZBA:

1. Child day care centers.
2. Group day homes.
3. Nursery schools.
4. Satellite receiving dishes or dish-type antennae in excess of two feet in diameter subject to the following conditions:
   a. Shall not be located between any street line and the building to which it is accessory.
   b. If roof mounted, shall not exceed a height of 15 feet.
   c. Shall be properly screened and/or landscaped. *11/19/95*

F. The following uses are permitted subject to approval of a Zoning Permit

1. Structure or rooftop mounted antennas, subject to the requirements and procedures listed in §6.25. *05/18/97*
2. Mobile Food Vendor, subject to the following:
   a. Must be removed from the permitted location for at least four (4) hours in any 24-hour period.
   b. Must be located on private property, and provide written permission from the owner of said property.
   c. Must be located within permitted parking area, not within any required landscaped area.
   d. If vendor occupies parking spaces, those spaces must be in excess of the other current uses on the site. Should such use(s) on the site change so as to require said spaces so as to comply with parking requirements, the mobile food vendor shall no longer be permitted to occupy said spaces.
   e. Must also have available two (2) parking spaces in addition to those required for the other current uses on the site. Should such use(s) on the site change so as to require said spaces so as to comply with parking requirements, the mobile food vendor shall no longer be permitted to utilize said spaces.
   f. Must be mounted on wheels or other method of moveable design, and must be readily moveable. If the operation is not immediately mobile, it shall be considered a "building" and be required to comply with applicable regulations for buildings.
   g. Must be self-contained; connections to external utilities shall not be permitted.
   h. Shall not have any signage beyond that which is affixed to the food service unit; temporary signage per Section 6.9 shall not be permitted for a mobile food vendor.
   i. No storage or location of any materials, seating, or other items associated with the mobile food vendor shall be permitted to be kept or located outside of the food service unit.
   j. Shall obtain any necessary approval under Health Code, Ordinance, or any other state or local requirements. *06/14/14*

G. The following uses are permitted and do not require any zoning approval:

1. Mobile Food vendor, provided any of the following conditions are met:
   a. Will not be located/parked on a property for more than twenty (20) days in any 365-day period; OR
   b. Is not located on the same property for more than four (4) hours in

any 24-hour period.

§4.6 COMMERCIAL (CB) DISTRICTS

A. Purpose - To provide suitable locations for general commercial and office development, in addition to more extensive commercial uses.

B. The following uses are permitted subject to Site Plan Approval in accordance with Article VII:

1. Any use permitted in §4.5.B, including any retail trade not listed in §4.5.B. *10/18/01*
2. Wholesale trade carried on entirely within a building or enclosure of suitable height to screen the operation from the street and any nearby residence district.
3. Newspaper and printing plants, book binding and photoengraving. *10/02/94*
4. Health and/or sports clubs, billiard and pool parlors, dance halls, bowling alleys, and similar places of public recreation operated as a business.
5. Storage warehouses.
6. Public utility buildings, including storage yard or electric substations, but excluding electric generating or gas manufacturing plants.
7. Retail lumber, fuel and building material yards and contractor's equipment storage, provided that all material is kept in a building or within an enclosure of suitable height to screen the operation from the street and any nearby residence district, but excluding the bulk storage of cement and concrete mixing and excluding tanks for petroleum products having a capacity greater than 10,000 gallons.
8. Cold storage locker plants.
9. Veterinary hospitals, provided that the animals housed overnight are kept in a building.
10. Forestry, including cutting, sawing and storage of lumber.

C. The following accessory uses are permitted:

1. Automatic amusement devices.
2. Signs in accordance with §6.9.
3. Off-street parking and loading in accordance with §6.11.
4. Accessory buildings as per §6.2.B. *09/19/92*
5. Outside storage as per §6.12. *09/19/92*
6. Satellite receiving dishes of two feet or less in diameter not located within a required front yard for a principal structure. *11/19/95*

D. The following uses require approval of a Special Permit in accordance with §7.5: *11/02/87*

1. Golf driving ranges, miniature golf courses, archery ranges, and other places of public entertainment operated as a business. *10/02/94*
2. Temporary mobile offices.
3. Uses in this zoning district generating 100 peak hour vehicle trips or more using the standards set forth in the most recent edition of Trip Generation, ITE, or a more accurate source, if available, subject to the following: *04/16/94 08/10/96 10/18/03*
   a. Submission of a traffic impact analysis containing present roadway conditions, existing roadway capacity, existing and projected traffic volumes (ADT, Peak A.M. and Peak P.M.), existing and projected volume capacity ratios, existing and projected levels of service, existing and proposed sight lines, site generated traffic and traffic distributions, and traffic accident experience.
   b. A traffic impact analysis will be required: *05/17/88*
      1. For an addition to an existing use, which use is now under the provisions of this section, and
      2. When an addition to an existing use brings that use under the

provisions of this section.

3. The traffic impact analysis shall cover the entire use, not merely the addition.

c. No traffic impact analysis or Special Permit will be required for an addition to an existing Special Permit use if the addition generates 25 peak hour vehicle trips or less. This provision shall be permitted to be used one time over the life of the use on a specific site.

d. In all cases in which the Commission feels that a peer review of the applicant's traffic impact analysis is warranted, the applicant shall be required to reimburse the Town for the cost of the peer review. This payment shall be made to the Town prior to the decision by the Commission on the application.

4. Adaptive Re-use to Multi-Family as per §6.16 *09/19/92*

5. Excavation and filling of land as per §6.10. *09/19/92*

6. Elderly day care centers, subject to the following requirements:

a. One client per 75 square feet of non-office space;

b. Private office space for medical monitoring and assessment of clients; and

c. The site must meet federal Americans with Disabilities Act barrier-free requirements.

d. Eligibility for certification from the Connecticut Association of Adult Day Centers, Inc. *09/14/96*

7. Deleted *11/17/07*

8. Motor vehicle repair garages, including welding and tire recapping, provided that all mechanical and repair operations are carried on in a building or within an enclosure of suitable height to screen the operation from the street and any nearby residence district. *02/09/04 09/17/05*

9. Vehicle fuelling/charging and/or service stations, including auto detailing, car washes, oil change facilities, and similar facilities. Location of dispensing appliance shall be subject to the determination of the Commission per the Special Permit application; however, under no circumstances shall any gasoline dispensing appliance be located within 25 feet of any street or property line. *10/02/94 02/09/04 09/17/05 07/29/19*

10. Automobile, truck, farm, motorcycle and related equipment dealerships. *02/09/04 09/17/05*

E. Special Requirements - In CA-12 and CB-12 Districts, upon recording of an agreement satisfactory to the Commission of the owners of two adjacent lots in the Town land records, one sideyard only of each lot may be omitted and a building may be built on the common property line, provided that the party or other walls separating them are of masonry construction. Except in the case of a building on the lot line, no side yard shall be less than as provided in Bulk Table 5.1B.

F. The following uses require a Special Exception from the ZBA:

1. Child day care centers . *11/02/87*

2. Group day homes.

3. Nursery schools.

4. Satellite receiving dishes or dish-type antennae in excess of 2 feet in diameter subject to the following conditions:

a. Shall not be located between any street line and the building to which it is accessory.

b. If roof mounted, shall not exceed a height of 15 feet.

c. Shall be properly screened and/or landscaped. *11/19/95*

G. The following uses are permitted subject to approval of a Zoning Permit:

1. Structure or rooftop mounted antennas, subject to the requirements and procedures listed in §6.25. *05/18/97*

2. Mobile Food Vendor, subject to the following: *06/14/14*

   a. Must be removed from the permitted location for a least four (4) hours in any 24 hour period.
   b. Must be located on private property, and provide written permission from the owner of said property.
   c. Must be located within permitted parking area, not within any required landscaped areas.
   d. If vendor occupies parking spaces, those spaces must be in excess of the other current uses on the site. Should such use(s) on the site change so as to require said spaces so as to comply with the parking requirements, the mobile food vendor shall no longer be permitted to occupy said spaces.
   e. Must also have available two (2) parking spaces in addition to those required for the other current uses on the site. Should such use(s) on the site change so as to require said spaces so as to comply with parking requirements, the mobile food vendor shall no longer be permitted to utilize said spaces.
   f. Must be mounted on wheels or other method of moveable design, and must be readily moveable. If the operation is not immediately mobile, it shall be considered a "building" and be required to comply with applicable regulations for buildings.
   g. Must be self-contained; connections to external utilities shall not be permitted.
   h. Shall not have any signage beyond that which is affixed to the food service unit; temporary signage per Section 6.9.C shall not be permitted for a mobile food vendor.
   i. No storage or location of any materials, seating, or other items associated with the mobile food vendor shall be permitted to be kept or located outside of the food service unit.
   j. Shall obtain any necessary approvals under Health Code, Ordinance, or any other state or local requirements.

H. The following uses are permitted an do not require any zoning approval:

1. Mobile Food Vendor, provided any of the following conditions are met:
   a. Will not be located/parked on a property for more than twenty (20) days in any 365-day period; OR
   b. Is not located on the same property for more than four (4) hours in any 24-hour period. *06/14/14*

§4.7 DOWNTOWN APARTMENT (DA) DISTRICT *06/18/89*

A. Purpose - An overlay district to permit and encourage multi-family dwelling units (11/17/07) in existing and new buildings within designated areas of the Downtown.

B. The following uses are permitted subject to approval of a Special Permit in accordance with §7.5:

1. Residential dwelling units in new or existing buildings provided that:
   a. Each lot shall contain a minimum of 25,000 sq. ft.
   b. Minimum lot area per dwelling unit shall be based upon the following:

	Units/Acre
Units of 1 room	35
Units of 2 rooms	30
Units of 3 rooms	20
Units of 4 rooms	15
Units of 5 or more rooms	10

11/02/87

   c. The required floor area per dwelling unit shall be:

Unit	**Minimum Floor Area (Sq.Ft.)**
1 room	300
3 rooms (1 bedroom)	500
4 rooms (2 bedrooms)	575

06/18/05

   d. The lot shall be served by sanitary sewers and public water supply.
   e. Bulk requirements in accordance with §5.1.B.
   f. Parking in accordance with §6.11.
   g. Landscaping in accordance with §6.14 except that all parking areas within 20 feet of abutting properties or a street shall be surrounded with a minimum 5 foot buffer area per §6.14.D.4.

§4.8 INDUSTRIAL DISTRICTS (I-40, I-20)

A. Purpose - To provide a suitable location for heavy industrial uses, manufacturing and distribution.

B. The following uses are permitted subject to Site Plan Approval in accordance with Article VII:

1. Any use permitted in §4.6.B. *10/18/01*
2. Wholesale laundries, dry cleaners, cleaning or dyeing works and carpet and rug cleaning.
3. Manufacturing, compounding, processing, packaging and assembling materials and products. *10/02/94*
4. Saw and planning mills and woodworking shops.
5. Machine and blacksmithing shops.
6. Motor truck terminals.
7. Plants for the processing and distribution of milk and edible dairy products and for the bottling or packaging of beverages, pharmaceuticals or toilet preparations, perfumes and similar products.
8. Bulk storage of less than 100,000 gallons of fuel oil. *07/30/93*
   a. Must not be contiguous to a residentially zoned property.
   b. Individual tanks must not exceed 25,000 gallon capacity.
9. The following uses, if located not less than 500 feet from the boundary of a residence or rural residence district:
   a. Storage of coal and manufacture of natural or acetylene gas.
   b. Asphalt manufacture, treatment and storage.
   c. Manufacture of alcohol, chemicals and plastics.
   d. Blast furnaces, foundries, metal fabricating plants and rolling mills, boiler works, drop forges.
   e. Manufacture of bricks, tile and terra-cotta.
   f. Manufacture of pulp and paper products.
   g. Bulk storage of cement and concrete mixing plants.
   h. Bulk storage of over 100,000 gallons of fuel oil.
   i. Manufacture and treatment of rubber products.
   j. Pet Crematorium, a place having an apparatus for the cremation of deceased household pets; limited to dogs, cats, rabbits and similarly sized animals. *02/19/11*

10. Proprietary Schools. *12/19/92*
11. Outpatient Medical Treatment Facility. *10/02/94*
12. Commercial Kennels, Canine Day Care and Grooming facilities subject to: *11/18/06*
    a. 70 sq.ft. of space shall be provided for each dog;
    b. shall provide a plan acceptable to the Water & Sewer Divisions and/or Health Department for waste disposal, including disinfecting applicable indoor and outdoor areas;
    c. outside exercise areas shall be enclosed by fence which shall be a minimum of 5 feet in height and shall provide appropriate screening; and
    d. shall not be closer than 500 feet to any existing residential zone.

C. The following permitted uses require approval of a Special Permit in accordance with §7.5:

1. Garbage and refuse processing or incineration, including the generation and sale of electricity and/or steam, or production of fiber in connection therewith.
2. Helipads, with the following provisions: *08/22/95*
   a. that the location is such that no undue nuisance or danger there from will

affect any neighboring property, and
b. that the site provides adequate room for landing and take-off.

3. Temporary mobile offices. *11/02/87*
4. Uses in this zoning district generating 100 peak hour vehicle trips or more using the standards set forth in the most recent edition of Trip Generation, ITE, or a more accurate source, if available, subject to the following: *04/16/94 08/10/96 10/18/03*
   a. Submission of a traffic impact analysis containing present roadway conditions, existing roadway capacity, existing and projected traffic volumes (ADT, Peak A.M. and Peak P.M.), existing and projected volume capacity ratios, existing and projected levels of service, existing and proposed sight lines, site generated traffic and traffic distributions, and traffic accident experience.
   b. A traffic impact analysis will be required: *05/17/88*
      1. For an addition to an existing use, which use is now under the provisions of this section, and
      2. When an addition to an existing use brings that use under the provisions of this section.
      3. The traffic impact analysis shall cover the entire use, not merely the addition.
   c. No traffic impact analysis or Special Permit will be required for an addition to an existing Special Permit use if the addition generates 25 peak hour vehicle trips or less. This provision shall be permitted to be used one time over the life of the use on a specific site.
   d. In all cases in which the Commission feels that a peer review of the applicant's traffic impact analysis is warranted, the applicant shall be required to reimburse the Town for the cost of the peer review. This payment shall be made to the Town prior to the decision by the Commission on the application.
5. Adaptive Re-use to Multi-family as per §6.16. *09/19/92*
6. Excavation and filling of land as per §6.10. *09/19/92*
7. Golf driving ranges, miniature golf courses, archery ranges, and other places of outdoor recreation operated as a business. *10/02/94*
8. Deleted *11/17/07*
9. Heliports with the following provisions: *05/19/01*
   a. That the location is such that no undue nuisance or danger there from will affect any neighboring property.
   b. That the site provides adequate room for landing and take-off.
   c. That mechanical service and repair operations are carried on in a building or within an enclosure of suitable height to screen the operation from the street and any nearby residence district.
   d. Must be located on not less than 15 acres of contiguous land.
   e. Must be located more than 1,000 feet from any residential zone.
   f. A parking requirement of 2 parking spaces for every person employed, but not less than 1 space for each 1,000 sq.ft. of GFA dedicated to heliport use.
   g. That the approach path shall be 100 feet or more from the ground when it crosses adjacent property boundaries.
   h. That except in the event of emergency, take-offs and landings will only be permitted between the hours of 8:00 a.m. and 10:00 p.m.
   i. That adequate lighting for night flying operations will be provided. No lighting related to night flying operations may operate at times that take-offs and landings are not permitted.
      1. Landing pad perimeter lights shall not exceed 60-watt bulb installations, which shall be equipped to shut off automatically within 20 minutes following a helicopter's approach and take off;
      2. Lighted wind direction indicators shall not exceed 100-watt installations, shall be installed to direct light downward at an angle not less than 45° from the horizontal plane and shall be

equipped to shut off automatically within 20 minutes following a helicopter's approach and take off;

3. Heliport beacons shall not exceed 500-watt installations.

j. That all proposed facilities will comply with all federal and state regulations and standards pertaining to heliports. In the event of conflict between the provisions of this section and those contained in such federal and state regulations and standards, the more strict provision shall prevail.

10. Motor vehicle repair garages, including welding and tire recapping, provided that all mechanical and repair operations are carried on in a building or within an enclosure of suitable height to screen the operation form the street and any nearby residence district. *09/17/05*

11. Vehicle fueling/charging and/or service stations, including auto detailing, car washes, oil change facilities, and similar facilities. Location of dispensing appliance shall be subject to the determination of the Commission per the Special Permit application; however, under no circumstances shall any gasoline dispensing appliance be located within 25 feet of any street or property line. *09/17/05 07/29/19*

12. Automobile, truck, farm, motorcycle and related equipment dealerships. *09/17/05*

D. The following accessory uses shall be permitted:

1. Automatic amusement devices.
2. Signs in accordance with §6.9
3. Off-street parking and loading in accordance with §6.11.
4. Accessory buildings as per §6.2.B. *09/19/92*
5. Outside storage as per §6.12. *09/19/92*
6. Satellite receiving dishes of two feet or less in diameter not located within a required front yard for a principal structure. *11/19/95*

E. Uses such as the following shall not be permitted in I Districts:

1. Distillation of bones, rendering of fat or reduction of animal matter.
2. Manufacture of animal glue.
3. Oil refining.
4. Stockyards or feeding pens.

F. The following uses require a Special Exception from the ZBA:

1. Child day care centers.
2. Group day homes. *11/02/87*
3. Nursery schools.
4. Satellite receiving dishes or dish-type antennae in excess of 2 feet in diameter subject to the following conditions: *01/19/95*
   a. Shall not be located between any street line and the building to which it is accessory.
   b. If roof mounted, shall not exceed a height of 15 feet.
   c. Shall be properly screened and/or landscaped.

G. The following uses are permitted subject to approval of a Zoning Permit:

1. Structure or rooftop antennas and towers, subject to the requirements and procedures listed in §6.25. *05/18/97*
2. Mobile Food Vendor, subject to the following: *06/14/14*
   a. Must be removed from the permitted location for at least four (4) hours in any 24 hour period.
   b. Must be located on private property, and provide written permission from the owner of said property.
   c. Must be located within permitted parking area, not within any required landscaped areas.

d. If vendor occupies parking spaces, those spaces must be in excess of the other current uses on the site. Should such use(s) on the site change so as to require said spaces so as to comply with parking requirements, the mobile food vendor shall no longer be permitted o occupy said spaces.
e. Must also have available tow (2) parking spaces in addition to those required for the other current uses on the site. Should such use(s) on the site change so as to require said spaces so as to comply with parking requirements, the mobile food vendor shall no longer be permitted to utilize said spaces.
f. Must be mounted on wheels or other method of moveable design, and must be readily moveable. If the operation is not immediately mobile, it shall be considered a "building" and be required to comply with applicable regulations for buildings.
g. Must be self-contained; connections to external utilities shll not be permitted.
h. Shall not have any signage beyond that which is affixed to the food service unit; temporary signage per Section 6.9.C shall not be permitted for a mobile food vendor.
i. No storage or location of any materials, seating, or other items associated with the mobile food vendor shall be permitted to be kept or located outside of the food service unit.
j. Shall obtain any necessary approvals under Health Code, Ordinance, or any other state or local requirements.

H. The following uses are permitted and do not require any zoning approval:

1. Mobile Food Vendor, provided any of the following conditions are met:
   a. Will not be located/parked on a property for more than twenty (20) days in any 365-day period; OR
   b. Is not located on the same property for more than four (4) hours in any 24-hour period. *06/14/14*

§4.9 INDUSTRIAL EXPANSION (IX) DISTRICT *12/12/98*

A. Purpose – To provide suitable locations for industrial and office uses on or near major streets.

B. The following uses are permitted subject to Site Plan Approval in accordance with Article VII:

1. Public utility facilities, buildings and storage yards. *10/02/94*
2. Offices
3. Printing and publishing.
4. Research operations, manufacturing, compounding, packaging and assembling materials and products and non-retail dry-cleaning facilities, not using perchloroethylene in the cleaning process, in facilities of at least 25,000 square feet. *09/19/99*
5. Storage and warehousing except self-storage and as specified in §4.8.B.8. and §4.8.B.9.g *09/19/93 06/15/02*
6. Agriculture, farming, forestry, truck or nursery gardening, including greenhouses; keeping of livestock and poultry.
7. Hotel, conference center or combination thereof containing not fewer than 150 sleeping rooms, provided that lot area of such facility shall not be less than 5 acres and be equal to the area requirement contained in §4.5.B.8.
8. Governmental buildings, facilities and uses.
9. Deleted *02/15/17*
10. Outpatient Medical Treatment Facility 10/02/94
11. Nonresidential Elder Care Centers 03/19/95
12. Deleted *05/15/99*

C. The following permitted uses require approval of a Special Permit in accordance with §7.5:

1. Helipads, with the following provisions: *08/22/95*
   a. That the location is such that no undue nuisance or danger there from will affect any neighboring property and,
   b. that the site provides adequate room for landing and taking off.
2. Uses in this zoning district generating 100 peak hours vehicle trips or more using the standards in the most recent edition of Trip Generation, ITE, or a more accurate source, if available, subject to the following: *04/16/94 08/10/96 10/18/03*
   a. Submission of a traffic impact analysis containing present roadway conditions, existing roadway capacity, existing and projected volumes (ADT, Peak A.M. and Peak P.M.), existing and projected volume capacity rations, existing and projected levels of service, existing and proposed sight lines, site generated traffic and traffic distributions, and traffic accident experience.
   b. A traffic impact analysis will be required: *05/17/88*
      1. For an addition to an existing use, which use is now under the provisions of this section, and
      2. When an addition to an existing use brings that use under the provisions of this section.
      3. The traffic impact analysis shall cover the entire use, not merely the addition.
   c. No traffic impact analysis or Special Permit will be required for an addition to an existing Special Permit use if the addition generates 25 peak hour vehicle trips or less. This provision shall be permitted to be used one time over the life

of the use on a specific site.

d. In all cases in which the Commission feels that a peer review of the applicant's traffic impact analysis is warranted, the applicant shall be required to reimburse the Town for the cost of the peer review. This payment shall be made to the Town prior to the decision by the Commission on the application.

3. Excavation and filling of land as per §6.10., subject to: *09/19/92*
   a. All work must be complete, including final grading and seeding within 12 months of the start of the excavation and fill.
4. Deleted *11/17/07*

D. The following permitted uses require a Special Exception from the ZBA:

1. Child day care centers.
2. Group day care homes.
3. Satellite receiving dishes or dish-type antennae in excess of two feet in diameter subject to the following conditions: *11/19/95*
   a. Shall not be located between any street line and the building to which it is accessory.
   b. If roof mounted, shall not exceed a height of 15 feet.
   c. Shall be properly screened and/or landscaped.

E. The following accessory uses are permitted:

1. Uses and structures accessory to a permitted use.
2. Signs in accordance with §6.9.
3. Off-street parking and loading in accordance with §6.11. The commission may waive up to 25 percent of the required parking area if the applicant demonstrates that such a waiver is warranted, providing that an area equal to the space required for such parking shall be reserved at the site in conformance with the requirements of this is chapter. Loading docks to be located at side or rear. The Commission may require screening of loading areas when such areas are visible from public rights-of-way.
4. Retail operations which are obviously secondary to, but integrated with, the main use on the premises, provided that the retail operation shall not utilize more than 3,000 square feet or 10 percent of the GFA of the principal use, whichever is smaller.
5. Ancillary food service and recreation facilities for the use of employees or clientele of uses in §4.9.B.
6. Accessory buildings as per §6.2.B. *09/19/92*
7. Outside storage as per §6.12. *09/19/92*
8. Satellite receiving dishes of two feet or less in diameter not located within a required front yard for a principal structure. *11/19/95*
9. Hydrogen road vehicle fuel station operations secondary to the main hydrogen generation equipment manufacturing provided that it is for the purposes of demonstration and/or testing prototype hydrogen fueling equipment as manufactured by the site operator and provided that the hydrogen road vehicle fuel station operation shall not fuel more than thirty (30) vehicles per day or dispense more than one-hundred (100) kilograms of hydrogen per day. *12/1/16 1/16/10*

F. Special Requirements

1. Deleted *03/19/11*
2. A description of the proposed operations in sufficient detail for a determination of whether or not they are permitted in the district.
3. Any use within the IX District shall be established, operated and

maintained in such a manner as to provide that each use shall be a good neighbor and in no way detract or limit the intended development of the area. *08/22/95*

4. Landscaping – in addition to the landscaping requirements of §6.14,the following additional requirements shall apply in the IX District:
   a. Front landscaped area
      1. There shall be a front landscaped area equal to the required front yard contained in §5.1.C. abutting the front property line(s).

G. The following uses are permitted subject to approval of a Zoning Permit:

1. Structure or rooftop mounted antennas, subject to the requirements and procedures listed in §6.25. *05/18/97*

2. Mobile Food Vendor, subject to the following: *06/14/14*
   a. Must be removed from the permitted location for at least four (4) hours in any 24 hour period.
   b. Must be located on private property, and provide written permission from the owner of said property.
   c. Must be located within permitted parking area, not within any required landscaped areas.
   d. If vendor occupies parking spaces, those spaces must be in excess of the other current uses on the site. Should such use(s) on the site change so as to require said spaces so as to comply with parking requirements, the mobile food vendor shall no longer be permitted to occupy said spaces.
   e. Must also have available two (2) parking spaces in addition to those required for the other current uses on the site. Should such use(s) on the site change so as to require said space so as to comply with parking requirements, the mobile food vendor shall no longer be permitted to utilize said spaces.
   f. Must be mounted on wheels or other method of moveable design, and must be readily moveable. If the operation is not immediately mobile, it shall be considered a "building" and be required to comply with applicable regulations for buildings.
   g. Must be self-contained; connections to external utilities shall not be permitted.
   h. Shall not have any signage beyond that which is affixed to the food service unit; temporary signage per Section 6.9.C shall not be permitted for a mobile food vendor.
   i. No storage or location of any materials, seating, or other items associated with the mobile food vendor shall be permitted to be kept or located outside of the food service unit.
   j. Shall obtain any necessary approvals under Health Code, Ordinance, or any other state or local requirements.

H. The following uses are permitted and do not require any zoning approval:

1. Mobile Food Vendor, provided any of the following conditions are met:
   a. Will not be located/parked on a property for more than twenty (20) days in any 365-day period; OR
   b. Is not located on the same property for more than four (4) hours in any 24-hour period. *06/14/14*

§4.10 INTERCHANGE DISTRICT (I-5)

A. Purpose - To utilize the key location of lands with accessibility to Route I-91 while protecting the Town's Public Water Supply Watershed by requiring high standards for development.

B. The following uses are permitted subject to Site Plan Approval in accordance with Article VII:

1. Research laboratories, office buildings, financial institutions, scientific research and development, and any investigative activity of a scientific or technical nature, in a building containing a minimum GFA of 60,000 sq. ft. (except as provided in Section H), and may include ancillary food service and recreation facilities, for use of employees or clientele thereof.
2. Hotels, motels, conference centers or combination thereof, containing a minimum of 150 guest rooms or a minimum GFA of 60,000 sq.ft. and may include ancillary: (a) restaurants; (b) meeting rooms; (c) recreational facilities; and (d) retail stores, providing the stores primarily serve guests of the facility, are not visible from outside the buildings, and do not contain more than 500 gross sq.ft. individually or 2,500 gross sq.ft. collectively. *01/15/00*
3. Existing residential uses.
4. Governmental buildings, facilities and uses.
5. Public Utility building and facilities.
6. Deleted 02/15/17
7. 0ut-patient medical treatment facility. *02/14/93*
8. Deleted *05/15/99*

C. The following permitted uses require approval of a Special Permit in accordance with §7.5:

1. Helipads, with the following provisions: *08/22/95*
   a. That the location is such that no undue nuisance or danger there from will affect any neighboring property, and
   b. that the site provides adequate room for landing and take-off.
2. Uses in this zoning district generating 100 peak hour vehicle trips or more using the standards set forth in the most recent edition of Trip Generation, ITE, or a more accurate source, if available, subject to the following: *04/16/94 08/10/96 10/18/03*
   a. Submission of a traffic impact analysis containing present roadway conditions, existing roadway capacity, existing and projected traffic volumes (ADT, Peak A.M. and Peak P.M.), existing and projected volume capacity ratios, existing and projected levels of service, existing and proposed sight lines, site generated traffic and traffic distributions, and traffic accident experience.
   b. A traffic impact analysis will be required: *05/17/88*
      1. For an addition to an existing use, which use is now under the provisions of this section, and
      2. When an addition to an existing use brings that use under the provisions of this section.
      3. The traffic impact analysis shall cover the entire use, not merely the addition.
   c. No traffic impact analysis or Special Permit will be required for an addition to an existing Special Permit use if the addition generates 25 peak hour vehicle trips or less. This provision shall be permitted to be used one time over the life of the use on a specific site.

d. In all cases in which the Commission feels that a peer review of the applicant's traffic impact analysis is warranted, the applicant shall be required to reimburse the Town for the cost of the peer review. This payment shall be made to the Town prior to the decision by the Commission on the application.

3. Adaptive Re-use to Multi-Family as per §6.16. *09/19/92*
4. Excavation and filling of land as per §6.10. *09/19/92*
5. Deleted 11/17/07

D. The following uses require a Special Exception from the ZBA:

1. Child day care centers.
2. Group day care homes.
3. Satellite receiving dishes or dish-type antennae in excess of two feet in diameter subject to the following conditions:
   a. Shall not be located between any street line and the building to which it is accessory.
   b. If roof mounted, shall not exceed a height of 15 feet.
   c. Shall be properly screened and/or landscaped. *11/19/95*

E. The following accessory uses are permitted:

1. Uses and structures customarily accessory to the permitted uses.
2. Signs in accordance with the requirements of §6.9 but pertaining only to a permitted use on the premises.
3. Off-street parking and loading in accordance with the requirements of §6.11, except as follows:
   a. No parking shall be permitted within 20 feet of any side or rear property line or within 50 feet of the front property line. Landscaped areas of at least 20 feet in width shall be provided along the side and rear property lines and of at least 50 feet in width along the front property line, all in accordance with §6.15. *11/02/87*
   b. If at least 70% of the required parking is covered in a garage or structure, the following regulations shall apply:
      (1) If the parking structure is constructed underground, the percentage of building coverage may be increased to 22.5%. p
      (2) If the parking structure is constructed above ground, the area covered by such a structure shall not be included as part of the building coverage.
   c. The Commission may waive up to 25% of the required parking area if the applicant demonstrates that such a waiver is warranted, provided that an area equal to the space required for such parking shall be reserved at the site in conformance with the requirements of this chapter.
4. Accessory buildings a per §6.2.B. *09/19/92*
5. Outside storage as per §6.12. *09/19/92*
6. Satellite receiving dishes of two feet or less in diameter not located within a required front yard for a principal structure *11/19/95*

F. The following uses are permitted subject to a Zoning Permit

1. Structure or rooftop antennas and towers, subject to the requirements and procedures listed in §6.25. *05/18/97*
2. Mobile Food Vendor, subject to the following: *06/14/14*
   a. Must be removed from the permitted location for at least four (4) hours in any 24 hour period.
   b. Must be located on private property, and provide written permission from the owner of said property.
   c. Must be located within permitted parking area, not within any required landscaped areas.
   d. If vendor occupies parking spaces, those spaces must be in excess of

the other current uses on the site. Should such use(s) on the site change so as to require said spaces so as to comply with parking requirements, the mobile food vendor shall no longer be permitted to occupy said spaces.

e. Must also have available two(2)parking spaces in addition to those required for the other current uses on the site. Should such use(s) on the site change so as to require said space so as to comply with parking requirements, the mobile food vendor shall no longer be permitted to occupy said spaces.
f. Must be mounted on wheels or other method of moveable design, and must be readily moveable. If the operation is not immediately mobile, it shall be considered a "building" and be required to comply with applicable regulations for buildings.
g. Must be self-contained; connects to external utilities shall not be permitted.
h. Shall not have any signage beyond that which is affixed to the food service unit; temporary signage per Section 6.9.C shall not be permitted for a mobile food vendor.
i. No storage or location of any materials, seating, or other items associated with the mobile food vendor shall be permitted to be kept or located outside of the food service unit.
j. Shall obtain any necessary approvals under Health Code, Ordinance, or any other state or local requirements.

G. Architectural design - The scale and mass of buildings and other structures, including, among other elements, the exterior building material, color, roofline, and building elevations shall be of such character as to harmonize and be compatible with other buildings in the district, and to preserve and improve the appearance and beauty of the community.

H. Special Requirements - For planned developments, the 50% open space requirement can be met on a tract or subdivision basis, where the subdivision consists of three or more lots, provided that:

1. The developer provides to the Commission as part of its subdivision application, a Master Concept Plan for the entire proposed subdivision, showing roads, lots and identifying open space areas, including total acreage of open space, the percentage of the tract represented by open space, and the percentage of each lot which will be open space.
2. No individual lot within such a subdivision shall contain less than 30% space.
3. Approval of a Master Concept Plan as described herein shall be binding upon the subdivision with respect to the distribution of open space. The open space plan shall not be changed unless agreed to between the applicant and the Commission. Each application for Site Plan Approval amendment approval shall conform to the open space plan. Any Site Plan application or amendment which modifies the open space plan shown on the approved Master Concept Plan shall be accompanied by a revised Master Concept Plan which demonstrates that the 50% open space requirement shall be attained within the subdivision.

I. Special Requirements - If two or more buildings are constructed on a single parcel, they shall contain an average minimum GFA of 60,000 sq. ft. per building but in any event each single building shall contain a minimum GFA of 30,000 sq. ft. No Certificate of

Occupancy shall be issued for any building containing GFA of less than 60,000 sq. ft. unless there shall have been issued, prior thereto, a certificate of occupancy for a building or buildings which, together with the proposed building, contain an average minimum GFA of 60,000 sq. ft. per building.

J. The following uses are permitted and do not require any zoning approval:

1. Mobile Food Vendor, provided any of the following conditions are met:
   a. Will not be located/parked on a property for more than twenty (20) days in any 365-day period; OR
   b. Is not located on the same property for more than four (4) hours in any 24-hour period. *06/14/14*

§4.11 DESIGN (DD) DISTRICT

A. Purpose - To allow for a variety of commercial uses while requiring additional landscaping to recognize the areas proximity to residential development. *04/14/86*

B. The following uses are permitted subject to Site Plan Approval in accordance with Article VII:

1. Business or professional offices and financial institutions.
2. Restaurants, cafes and taverns provided they are not drive-in restaurants subject to: *10/02/94- 11/13/04*
   a. Permanent outdoor patios at restaurants, cafes and taverns shall be surrounded by a five-foot tall white vinyl fence with the finished side facing out.
   b. Square footage within the patio shall be included as restaurant/café/tavern square footage for parking purposes.
3. Public utility buildings and facilities. *10/02/94*
4. Stores and shops where goods are sold and services are rendered, primarily at retail.
5. Barber shops, beauty parlors, manicurists, massage therapists, sun tanning parlors, and similar personal services. *10/02/94*
6. Government buildings, facilities and uses. *10/02/94*
7. Business Schools.
8. Rooming and boarding houses.
9. Billiard and pool parlors, bowling alleys, skating rinks, and other indoor places of public recreation operated as a business. *10/02/94*
10. Funeral homes.
11. Printing and publishing establishments in which the floor area shall not exceed 2,000 sq. ft. *10/02/94*
12. RV storage. *11/22/90*
13. Veterinary hospitals for small animals, provided that the animals housed overnight are kept in a building, and that it does not provide boarding. *05/16/92*
14. Educational, religious or philanthropic use by a non-profit corporation. *06/14/08*

C. The following permitted uses require approval of a Special Permit in accordance with Section 7.5:

1. Child day care centers.
2. Group day care homes.
3. Satellite receiving dishes or dish-type antennae in excess of two feet in diameter subject to the following conditions:
   a. Shall not be located between any street line and the building to which it is accessory.
   b. If roof mounted, shall not exceed a height of 15 feet.
   c. Shall be properly screened and/or landscaped. *11/19/95*
4. Uses in this zoning district generating 100 peak-hour vehicle trips or more using the standards set forth in the most recent edition of Trip Generation, ITE, or a more accurate source, if available, subject to the following: 04/16/94 08/10/96 10/18/03
   a. Submission of a traffic impact analysis containing present roadway conditions, existing roadway capacity, existing and projected traffic volumes (ADT, Peak A.M. and Peak P.M.), existing and projected volume capacity ratios, existing and projected levels of service, existing and proposed sight lines, site generated traffic and traffic distributions, and traffic accident experience.
   b. A traffic impact analysis will be required: *05/17/88*
      1. For an addition to an existing use, which use is now

under the provisions of this section, and

2. When an addition to an existing use brings that use under the provisions of this section.
3. The traffic impact analysis shall cover the entire use, not merely the addition.

c. No traffic impact analysis or Special Permit will be required for an addition to an existing Special Permit use if the addition generates 25 peak-hour vehicle trips or less. This provision shall be permitted to be used one time over the life of the use on a specific site.

d. In all cases in which the Commission feels that a peer review of the applicant's traffic impact analysis is warranted, the applicant shall be required to reimburse the Town for the cost of the peer review. This payment shall be made to the Town prior to the decision by the Commission on the application.

5. Theaters for dramatic or musical productions (but not including theaters for indoor picture projection) and may include ancillary use as convention and/or conference facility. *10/02/88*
6. Adaptive Re-use to Multi-Family as per §6.16. *09/19/92*
7. Excavation and filling of land as per §6.10. *09/19/92*
8. Golf driving ranges, miniature golf courses, archery ranges, and other places of outdoor recreation operated as a business. *10/02/94*
9. Deleted *11/17/07*

D. The following accessory uses are permitted:

1. Uses and structures customarily accessory to the permitted uses.
2. Signs in accordance with the requirements of §6.9.
3. In addition to the parking and loading requirements of §6.11, no parking or loading shall be permitted within 10 feet of any side or rear property line or within 25 feet of the front property line. Landscaped areas of at least 10 feet in width shall be provided along the side and rear property lines and of at least 25 feet in width along the front property line, all in accordance with §6.14.
4. Accessory buildings as per §6.2.B. *09/19/92*
5. Outside storage as per §6.12. *09/19/92*
6. Satellite receiving dishes of two feet or less in diameter not located within a required front yard or a principal structure. *11/19/95*

E. Distance between uses - There shall be a minimum open space distance of at least 50 feet between any proposed or existing non-residential building or non-residential parking lot within this district and the nearest existing or proposed residential building within this district. At least 10 feet of this open space shall be suitably landscaped in accordance with §6.14.

F. The following uses are permitted subject to a Zoning Permit

1. Structure or rooftop mounted antennas, subject to the requirements and procedures listed in Section 6.25. *05/18/97*
2. Mobile Food Vendor, subject to the following: *06/14/14*
   a. Must be removed from the permitted location for at least four (4) hours in any 24 hour period.
   b. Must be located on private property, and provide written permission from the owner of said property.
   c. Must be located within permitted parking area, not within any required landscaped areas.
   d. If vendor occupies parking spaces, those spaces must be in excess of the other current uses on the site. Should such use(s) on the site change so as to require said spaces so as to comply with parking requirements, the mobile food vendor shall no longer be permitted to occupy said spaces.

e. Must also have available two (2) parking spaces in addition to those required for the other current uses on the site. Should such use(s) on the site change so as to require said spaces so as to comply with parking requirements, the mobile food vendor shall no longer be permitted to utilize said spaces.

f. Must be mounted on wheels or other method of moveable design, and must be readily moveable. If the operation is not immediately mobile, it shall be considered a "building" and be required to comply with applicable regulations for buildings.
g. Must be self-contained; connections to external utilities shall not be permitted.
h. Shall not have any signage beyond that which is affixed to the food service unit; temporary signage per Section 6.9.C shall not be permitted for a mobile food vendor.
i. No storage or location of any materials, seating, or other items associated with the mobile food vendor shall be permitted to be kept or located outside of the food service unit.
j. Shall obtain any necessary approvals under Health Code, Ordinance, or any other state or local requirements.

G. The following uses are permitted and do not require any zoning approval:

1. Mobile Food Vendor, provided any of the following conditions are met:
   a. Will not be located/parked on a property for more than twenty (20) days in any 365-day period; OR
   b. Is not located on the same property for more than four (4) hours an any 24-hour period. *06/14/14*

§4.12. AQUIFER PROTECTION (APD) DISTRICT Deleted 02/19/06

§4.13 WATERSHED PROTECTION (WPD) DISTRICT *Revised 10/16/10*

A. Purpose - An overlay district which provides for additional conditions, standards and safeguards to the permitted uses of the underlying district in order to protect and maintain the surface waters of the Wallingford, Meriden and SCRWA Public Water Supply Watersheds to a quality consistent with their use as the primary source of drinking water for Wallingford and area towns.

B. Stormwater Runoff Treatment - The stormwater runoff generated by the initial 0.5" to 1.0" of rainfall from all parking lots and from travel ways where topographically feasible, within the confines of any approved commercial or industrial development, located upon the three Public Water Supply Watersheds, shall be collected and treated.

1. Treatment shall be required to the extent that the quality of the stormwater runoff from the site shall comply with the Connecticut Water Quality Standards & Criteria for class AA drinking water supply surface waters as promulgated by the Connecticut Department of Environmental Protection, Water Compliance Unit or with §19-13-B102 of the State Public Health Code, or the latest revision thereof, as it applies to the standards for quality of untreated water at the intake to a treatment plant with "complete conventional treatment", whichever is more stringent except that the standard for total coliform in §19-13-B102 of the Public Health Code shall apply.
2. The amount of stormwater runoff to be collected and treated (within the range of the initial 0.5" to 1.0" of rainfall occurring within any specific 48 hour period which is initiated by the start of a rainfall event) shall be determined for each site on an individual basis by the Wallingford Water Division in accordance with site usage, acreage, topography and other considerations.
3. The treatment system shall be incorporated within a stormwater management system for the total site which will provide a mechanism to divert and capture for treatment "initial" runoff from appropriate areas as defined above and which will provide for the remainder of the stormwater runoff to be diverted into a conventional detention basin for peak flow attenuation.
4. Treatment shall consist of a system which incorporates recognized technologies which have been demonstrated to provide the necessary pollutant removal capabilities. In all cases, minimum treatment shall consist of a "grease trap" type separator designed to remove and retain oils, scums, and other floatables from the diverted "initial" runoff, to be followed by storage in an infiltration basin. This infiltration basin shall be designed to promote infiltration of the effluent into the ground. Water in this infiltration basin shall be aerated. All proposed treatment systems shall be subject to approval by the Wallingford Water Division. Since operation of the treatment system will be intermittent, equipment and structures shall be housed so that the system can operate in all seasons of the year.
5. The owner shall submit complete calculations, design drawings and an operations/maintenance plan for the stormwater management and treatment systems to the Wallingford Water Division for approval. The owner shall also develop and submit for approval by the Water Division, a street sweeping plan for the completed site which shall set forth a schedule for the periodic sweeping of parking lots and travel ways. The owner shall also develop and submit for approval by Water Division, a schedule for the periodic cleaning of the required separator. *10/02/94*
6. The Water Division shall, on a regular basis, sample the effluent of the stormwater management system prior to its leaving the site. The samples shall be analyzed by a State certified laboratory for parameters to be

determined by the Water Division in order to confirm compliance of the site runoff with the previously cited water quality standards. The Water Division shall bill the owner of the site for the cost of the analysis of up to four samples per year.

7. The Water Division shall have the right of access without notice for the purpose of insuring that the owner properly maintains and operates the facility. The Water Division shall have the right to take water samples, order repairs or changes to the equipment and facility when warranted.
8. The owner shall post a performance bond with the Water Division to cover the construction and start-up of the storm water treatment system, in an amount and in a form to be determined by the Water Division. This work may also be incorporated within the normal water/sewer utility installation performance bond required for the site. *03/19/95*

C. Installation of Storage Containers:

1. All storage vessels located within the Wallingford, Meriden & SCRWA Public Water Supply Watersheds and located above or below ground level, or in a building, that will hold hazardous, toxic, and/or contaminated materials, either solid or liquid, shall be constructed of non-porous material. Hazardous, toxic and contaminated materials shall be as defined in Title 49, Code of Federal Regulations, Parts 170-179.(Department of Transportation)
2. All storage vessels for liquid material located above ground, or in a building, shall be contained within a non-porous structure large enough to retain all of the escaping liquid should the storage vessel rupture. The only exception to this requirement shall be storage vessels of 275 gallon capacity or less in residential homes.
3. All storage vessels for liquid or solid material located below ground, and not in a building, shall be positioned within a non-porous vault large enough to retain all of the stored material should the storage vessel rupture. An alternative to the non-porous vault may be a dual-walled vessel with a UL approval. The dual-wall vessel shall be constructed with a secondary wall completely surrounding the primary wall, and there shall be a definite annular space between them.
4. A monitoring system shall be incorporated for all buried installations to detect leaks. The leak monitoring system may be a simple flexible dipstick capable of protruding into the space between tank and vault or the annular space to be provided with the dual-wall system. More elaborate electronic systems will be acceptable.
5. For all installations not meeting one of the exemptions listed below, a written inventory record itemizing the balance of incoming material vs. outgoing material shall be kept on a daily basis. A record of the monitoring results shall also be kept on a daily basis. These records shall be available on demand without notice, to officials of the Town Water Division or Fire Prevention Bureau. Facilities shall be exempt from the daily reporting requirements if they:
   a. Generate small quantities of hazardous waste as defined by §5 of the Hazardous Waste Management Guidelines for Small Quantity Generators promulgated by the Connecticut Department of Environmental Protection, January, 1984 or latest revision.
   b. Meet one of the exemptions defined in §22a-449(d)-1(c) of the regulations for Nonresidential Underground Storage of Oil and Petroleum Liquids promulgated by the Connecticut Department of Environmental Protection, April 17, 1985 or latest revision.
6. A written permit signed by the designated authority in the Water Division and Fire Prevention Bureau shall be required prior to installation and such permit shall be renewed annually.

D. Parking Lots - No parking lot containing more than ten parking spaces shall use sodium chloride for ice control.

§4.14 MULTI-FAMILY RESIDENCE DISTRICTS (RM-40, RM-18, RM-11, RM-6)

A. Purpose - To allow the completion of multi-family developments approved under previous Zoning Regulations.

B. The following uses are permitted subject to a Zoning Permit

1. Structure or rooftop mounted antennas, subject to the requirements and procedures listed in §6.25. *05/18/97*

C. The following uses shall be permitted, subject to Site Plan Approval in accordance with Article VII:

1. Multi-family dwellings.
2. Administrative and financial offices located in free standing structures by state licensed assisted living service agencies within multi-family developments accepted as managed residential communities by the Connecticut Department of Public Health and Addiction Services providing such services to that residential development only. Said administrative and financial building shall be located no closer than one-hundred feet (100') from any abutting residential development. *04/09/05*

D. The following Accessory Uses shall be permitted:

1. Garages.
2. Maintenance and utility shops for the upkeep and repair of buildings, structures and equipment on the site.
3. Utility buildings and structures.
4. Recreation facilities.
5. Beauty and barber shops, cafes, conveniences stores, and other small scale commercial operations intended to serve exclusively the residents and guests of multi-family housing accepted as "managed residential communities" by the Connecticut Department of Public Health and Addiction Services. *09/14/96*
6. Provision of assisted living services, including supportive administrative services, by state licensed "assisted living service agencies" within those multi-family developments accepted as "managed residential communities" by the Connecticut Department of Public Health and Addiction Services. *09/14/96*

E. The following uses are permitted subject to a special permit:

1. Deleted 11/17/07

F. The following uses are permitted subject to approval of a Zoning Permit:

1. Structure or rooftop mounted antennas, subject to the requirements and procedures listed in §6.25. *05/18/97*

G. Special Requirements:

1. All dwelling units shall be served by sanitary sewers.
2. Building height shall not exceed 40 feet. *09/11/06*
3. To allow an increase in the height of structures in the RM-40 zone for congregate housing facilities from 30 to 40 feet. *09/11/06*

District	Minimum Lot Area	Minimum Yards (Feet) Front	Side (Each)	Rear	Maximum Coverage (%)	Height (feet)	Allowable Units Per Acre
RM-40	5 acres	50	30	30	15	40	3.6
RM-18	5 acres	40	20	30	25	30	5.4
RM-11	5 acres	20	12	30	25	30	10.1
RM-6	5 acres	10	6	30	25	30	13.9

a. For the purpose of computing density, assisted living units located in state licensed assisted living service agencies within multi-family developments accepted as managed residential communities by the Connecticut Department of Public Health and Addition Services shall be computed as one-third (1/3) of a residential unit. *09/11/06*

4. Fire Hydrants - Shall be installed and located within 500 feet of each dwelling unit.

5. Sidewalks - A sidewalk on at least one side shall be required along any road access connecting with an existing public road and along the major interior roads of the development, unless in the opinion of the Commission, such sidewalks are not necessary.

6. Location of Recreation Facilities - Swimming pools, tennis courts, and other recreational facilities shall be as centrally located as p possible, protected with a suitable safe fence, located at least 75 feet from any dwelling unit and shall not be located within any of the required setbacks.

7. Grouping - The shortest distance between any two structures shall be not less than the height of the taller structure, with a minimum of 25 feet. Courts shall be completely open on one side.

8. Parking - In addition to the requirements of §6.11, one of the required parking spaces for each unit shall be within 25 feet of such unit; the remaining required parking spaces shall be within 75 feet of the units. A maximum of 10 consecutive parking spaces may be provided in one line without interruption. If more than 10 parking spaces shall be provided, there shall be a minimum landscaped area of 20 feet by 20 feet between each continuous line of 10 parking spaces. This requirement shall not apply to buildings not used for dwelling unit purposes. Parking shall not be permitted in any required setback area.

9. Phasing - The Commission may approve a development plan to be completed in phases. The Commission may grant approval limited to each phase of development. Each phase shall be capable of independent existence without the completion of succeeding phases. Buffer and setback requirements shall not apply to the common line between phases of development.

10. Road Standards - All interior roads shall comply with the standards specified in the Town's Subdivision Regulations, except that pavement

width and curbing may be waived at the discretion of the Commission.

10/02/94

§4.15 QUARRY SUPPORT OVERLAY (QSO) ZONE *06/18/89*

A. Purpose: To establish areas adjacent to land zoned for industrial uses in which certain activities supportive of those uses can take place, and in which the zoning regulations of the zone (the underlying zone) in existence immediately prior to designation as a Quarry Support Overlay Zone shall continue.

B. The following uses are permitted subject to approval of a Zoning Permit in accordance with §8.3:

1. Same as underlying zone.

C. The following permitted uses require approval of a Special Permit in accordance with §7.5:

1. Same as underlying zone.

D. The following uses require a Special Exception from the Zoning Board of Appeals in accordance with §9.1:

1. Same as underlying zone.

E. The following accessory uses are permitted:

1. Same as underlying zone.

F. The following uses shall be permitted subject to Site Plan Approval in accordance with Article VII:

1. Same as underlying zone.
2. Open and closed storage of the earth products produced on an adjacent industrially zoned site pending shipment or re-handling, subject to the requirements of §6.10.G.
3. Re-handling of earth products produced on the adjacent site to create new or different grades, styles, types or mixes of those products. Such final products may include materials brought in from off-site to be mixed with the products produced on the adjacent industrially zoned site.
4. Structures and equipment necessary or desirable to:
   (a) Create new or different grades, styles, types or mixes of earth products, including but not limited to, concrete batch plants, screening, sorting, washing and mixing facilities;
   (b) operate weighing scales and their associated facilities;
   (c) effect and allow the transfer and shipment of such products within or off the site, including vehicle servicing areas and spur lines.

G. Special Requirements:

1. The minimum size of a Quarry Support Overlay Zone shall be 5 acres.
2. A Quarry Support Overlay Zone must be contiguous to land zoned I-40 or I-20 under the Wallingford Zoning Regulations.
3. The zoning classification in place immediately prior to the designation of property as subject to a Quarry Support Overlay Zone shall continue in effect until specifically changed by the Commission.

§4.16 ROUTE 5 DISTRICT (RF-40) *08/10/96*

A. Purpose - To allow for a mixture of uses which are compatible with the district's position as a primary area for commerce, while controlling future uses in order to avoid unacceptable burdens on the infrastructure and quality of life within the district and adjacent areas.

B. The following uses are permitted subject to Site Plan Approval in accordance with Article VII:

1. **Use Group A**

   a. Educational, religious, or philanthropic use by a non-profit corporation or governmental unit, excluding correctional institutions.
   b. Boarding and rooming houses.
   c. Funeral homes.
   d. Self-service clothes cleaning establishments.
   e. Hotels and motels with not less than six units.
   f. Museums or art galleries.
   g. Governmental buildings, facilities and uses.
   h. Public utility buildings and facilities.
   i. Dance studios.
   j. Veterinary hospitals for small animals, provided that the animals housed overnight are kept in a building.
   k. Wholesale trade.
   l. Storage warehouses.
   m. Building material yards and contractor's equipment storage, provided that all material is kept in a building or within an enclosure of suitable height to screen the operation from the street and any nearby residence district.
   n. Business schools.
   o. Manufacturing, compounding, processing, packaging and assembling materials and products.
   p. Deleted *05/15/99*

2. **Use Group B**

   a. Offices and financial institutions.
   b. Restaurants and other food service facilities with or without a liquor permit.
   c. Stores and shops where goods are sold and services are rendered primarily at retail.
   d. Clubs.
   e. Cafes and taverns subject to: *11/13/04*
      1. Permanent outdoor patios shall be surrounded by a five-foot tall white vinyl fence with the finished side facing out.
      2. Square footage within the patio shall be included as café/tavern square footage for parking purposes.
   f. Billiard and pool parlors, bowling alleys, skating rinks, health and/or sports clubs and other indoor places of public recreation operated as a business.
   g. Theaters for indoor picture projection or dramatic or musical productions.
   h. Outpatient Medical Treatment Facility.

C. The following uses require approval of a Special Permit in accordance with §7.5:

1. **Use Group A**
   a. Temporary mobile office.
   b. Group A uses in this zoning district generating 100 peak-hour vehicle trips or more using the standards set forth in the most recent edition of Trip Generation, ITE, or a more accurate source, if available, subject to the following: *04/16/94 10/18/03*
      1. Submission of a traffic impact analysis containing present roadway conditions, existing roadway capacity, existing and projected traffic volumes (ADT, Peak A.M. and Peak P.M.), existing and projected volume capacity ratios, existing and projected levels of service, existing and proposed sight lines, site generated traffic and traffic distributions, and traffic accident experience.
      2. A traffic impact analysis will be required: *05/17/88*
         a. For an addition to an existing use, which use is now under the provisions of this section, and
         b. When an addition to an existing use brings that use under the provisions of this section.
         c. The traffic impact analysis shall cover the entire use, not merely the addition.
      3. A traffic impact analysis will not be required for an addition to an existing Special Permit use if the addition generates 25 peak-hour vehicle trips or less. This provision shall be permitted to be used one time over the life of the use on a specific site.
      4. In all cases in which the Commission feels that a peer review of the applicant's traffic impact analysis is warranted, the applicant shall be required to reimburse the Town for the cost of the peer review. This payment shall be made to the Town prior to the decision by the Commission on the application.
   c. Excavation and filling of land as per §6.10.
   d. Golf driving ranges, miniature golf courses, archery ranges, and other places of outdoor recreation operated as a business.
   e. Deleted *11/17/07*
   f. Motor vehicle repair garages, including welding and tire recapping, provided that all mechanical and repair operations are carried on in a building or within an enclosure of suitable height to screen the operation from the street and any nearby residence district. *09/17/05*
   g. Automobile, truck, farm, motorcycle and related equipment dealerships. *09/17/05*
   h. Vehicle fueling/charging and/or service stations, including auto detailing, car washes, oil change facilities, and similar facilities. Location of dispensing appliance shall be subject to the determination of the Commission per the Special Permit application; however, under no circumstances shall any gasoline dispensing appliance be located within 25 feet of any street or property line. *09/17/05 07/29/19*
   i. Adaptive reuse to multi-family as per §6.16. *03/15/97*

2. **Use Group B**

   a. Group B uses in this zoning district generating 100 peak-hour vehicle trips or more using the standards set forth in the most recent edition of Trip Generation, ITE, or a more accurate source, if available, subject to the following: *04/16/94 10/18/03*
      1. Submission of a traffic impact analysis containing and projected traffic volumes (ADT, Peak A.M. and Peak P.M.), existing and

projected levels of services, existing and proposed sight lines, site generated traffic and traffic distributions, and traffic accident experience.

2. A traffic impact analysis will be required: *05/17/88*
   a. For an addition to an existing use, which use is now under the provisions of this section, and
   b. When an addition to an existing use brings that use under the provisions of this section.
   c. The traffic impact analysis shall cover the entire use, not merely the addition.
   d. Gasoline service station, with or without automobile repair. *(4/17/98) 02/09/04 09/17/05*
3. A traffic impact analysis will not be required for an addition to an existing Special Permit use if the addition generates 25 peak-hour vehicle trips or less. The provision shall be permitted to be used one time over the life at the use on a specific site.
4. In all cases in which the Commission feels that a peer review of the applicant's traffic impact analysis is warranted, the applicant shall be required to reimburse the Town for the cost of peer review. This payment shall be made to the Town prior to the decision by the Commission on the application.

D. The following accessory uses shall be permitted:

1. Automatic amusement devices.
2. Signs in accordance with §6.9.
3. Off-street parking and loading in accordance with §6.11.
4. Accessory buildings as per §6.2.B.
5. Outside storage as per §6.12.
6. Tents for the sale of merchandise subject to:
   a. Shall be limited to 21 consecutive days, two times a year.
   b. Shall be setback a minimum of 50 feet from the streetline.
   c. Shall be situated on the property so as not to reduce the amount of on-site parking below the amount required by these regulations for the existing use(s) and the tent(s).

E. Special Requirements:

1. Landscaping - In addition to the landscaping requirements contained in §6.14, the following additional requirements shall apply in the RF-40 District.
   a. Front landscaped area
      1. There shall be a front landscaped area equal to the required front yard contained in §5.1.C. abutting the front property line(s).
      2. The front landscaped area shall contain a minimum of 6 inches of shade tree diameter per 50 feet.
      3. There shall be at least one shade tree in each 50 linear feet of lot frontage.
   b. Landscaped parking area
      1. All uses required to provide 30 or more off-street parking spaces shall provide at least 20 square feet of interior landscaping within the paved portion of the parking area per parking space.
      2. Each separate landscaped area shall contain a minimum of 400 square feet and one shade tree.
   c. Trees
      1. All trees used to meet the requirements of §6.14 and this section must be able to reach a mature height of 35 feet.
      2. All trees shall be a mix of hardy, native species which provide canopy.

2. Sidewalks
   a. A concrete sidewalk at least 4 feet in width and built to Town specifications shall be provided through the entire parking lot opposite the main entrance to each retail business with a size of at least 40,000 square feet.
   b. A concrete sidewalk at least 4 feet in width shall be provided along all street frontage.
   c. Sidewalks shall be located within the street R.O.W. along all Town roads, and within the front landscaped area along Route 5.

3. Access
   a. No additional access shall be permitted to North Main Street south of Route 68.
   b. Not more than one driveway to Route 5 shall be permitted.

4. Internal Property Connection
   a. To improve traffic circulation and safety on Route 5 and adjacent roads, the Commission may require that access easements for present and/or future driveway connections to up to two adjacent properties be provided on all sites.
   b. Each access easement and driveway shall be 24 feet wide and shall be located on each site so that when interconnection occurs, parking, loading and/or driveways will not be negatively impacted by the interconnection.
   c. Driveways shall be built up to the property boundary when required by the Commission, and an access easement covering the area of the driveway shall be recorded as a covenant in the Wallingford Land Records and shall run with the land.
   d. When an adjoining property is developed, the developer of said property shall be required to connect to up to two adjoining internal access driveways and shall be required to file access easements on each.
   e. For each access easement required, the minimum landscaping contained in §5.1.C. shall be reduced by 3 percent. No more than two 3 percent reductions shall be permitted per site.

5. Building Coverage

   For the purpose of ascertaining building coverage within the RF-40 Zone of structures containing uses as set out in §4.16.B.2, the roof area of walkway canopies in existence on August 10, 1996 shall not be included.

05/17/98

F. The following uses require a Special Exception from the ZBA: *05/18/97*

1. Child Day Care Centers
2. Group Day Care Homes
3. Nursery Schools
4. Satellite receiving dishes or dish-type antennae in excess of 2 feet in diameter subject to the following conditions:
   a. Shall not be located between any street line and the building to which it is accessory.
   b. If roof mounted, shall not exceed a height of 15 feet.
   c. Shall be properly screened and/or landscaped.

G. The following uses are permitted and do not require any zoning approval:

1. Mobile Food Vendor, provided any of the following conditions are met:

a. Will not be located/parked on a property for more than twenty (20) days in any 365-day period; OR
b. Is not located on the same property for more than four (4) hours in any 24-hour period. *06/14/14*

H. The following uses are permitted subject to a Zoning Permit:

1. Mobile Food Vendor, subject to the following: *06/14/14*
   a. Must be removed from the permitted location for at least four (4) hours in any 24 hour period.
   b. Must be located on private property, and provide written permission from the owner of said property.
   c. Must be located within permitted parking area, not within any required landscaped areas.
   d. If vendor occupies parking spaces, those spaces must be in excess of the other current uses on the site. Should such use(s) on the site change so as to require said spaces so as to comply with parking requirements, the mobile food vendor shall no longer be permitted to occupy said spaces.
   e. Must also have available two (2) parking spaces in addition to those required for the other current uses on the site. Should such use(s) on the site change so as to require said spaces so as to comply with parking requirements, the mobile food vendor shall no longer be permitted to utilize said spaces.
   f. Must be mounted on wheels or other method of moveable design, and must be readily moveable. If the operation is not immediately mobile, it shall be considered a "building" and be required to comply with applicable regulations for buildings.
   g. Must be self-contained; connections to external utilities shall not be permitted.
   h. Shall not have any signage beyond that which is affixed to the food service unit; temporary signage per Section 6.9.C shall not be permitted for a mobile food vendor.
   i. No storage or location of any materials, seating, or other items associated with the mobile food vendor shall be permitted to be kept or located outside of the food service unit.
   j. Shall obtain any necessary approvals under Health Code, Ordinance, or any other state or local requirements.

§ 4.17 NEIGHBORHOOD BUSINESS DISTRICT

A. Purpose – To provide in certain residential neighborhoods, areas in which can be found limited convenience shopping and office services. These commercial uses shall be limited in number, size, and type.

B. The following uses are permitted subject to Site Plan approval in accordance with Article VII:

1. Offices and financial institutions.
2. Stores and shops where goods are sold and services are rendered primarily at retail, including: *10/02/94*
   a. Bakery, catering establishment or confectionery store.
   b. Barber shops, beauty parlors, manicurists, sun tanning salons, massage therapists, and similar personal services.
   c. Book or stationary store.
   d. Laundry, cleaning and dying agencies.
   e. Clothing, tailoring, dressmaking.
   f. Drugs, toilet articles, dry goods and notions.
   / g. Florist shop, garden and farm supplies or equipment.
   h. Furniture, interior decorating, hardware, radios, electrical or household appliances, sporting goods.
   i. Gift, antique or art or jewelry store.
   j. Groceries, fruit, vegetables or meats.
   k. Rental equipment if stored indoors.
   l. Retail package store, the sale of wine, beer, or spirituous liquors.
   m. Shoes and shoe repair.
   n. Dog or cat grooming.
   o. Printing and publishing establishments in which the floor area shall not exceed 2,000 sq.ft.
3. Governmental buildings, facilities and uses.
4. Museums or art galleries.
5. Restaurants, provided they are not drive-in restaurants.
6. Dance studios.
7. Veterinary hospitals for small animals, provided that the animals housed overnight are kept in a building and that it does not provide boarding.

C. The following permitted uses require approval of a Special Permit in accordance with §7.5:

1. Temporary mobile office.
2. Uses in this zoning district generating 100 peak-hour vehicle trips or more using the standards set forth in the most recent edition of Trip Generation, ITE, or a more accurate source, if available, subject to the following: *04/16/94 08/10/96 10/18/03*
   a. Submission of a traffic impact analysis containing present roadway conditions, existing roadway capacity, existing and projected traffic volumes (ADT, Peak a.m. and Peak p.m.), existing and projected volume capacity rations, existing and projected levels of service, existing and proposed sight lines, site generated traffic and traffic distributions, and traffic 0 accident experience.
   b. A traffic impact analysis will be required: *05/17/88*
      1. For an addition to an existing use, which use is now under the provisions of this section, and
      2. When an addition to an existing use brings that use under the provisions of this section.
      3. The traffic impact analysis shall cover the entire use,

not merely the addition.

c. No traffic impact analysis or Special Permit will be required for an addition to an existing Special Permit use if the addition generates 25 peak-hour vehicle trips or less. This provision shall be permitted to be used one time over the life of the use on a specific site.

d. In all cases in which the Commission feels that a peer review of the applicant's traffic impact analysis is warranted, the applicant shall be required to reimburse the Town for the cost of the peer review. This payment shall be made to the Town prior to the decision by the Commission on the application.

e. Structure or rooftop antennas and towers, subject to the requirements and procedures listed in §6.25. *05/18/97*

D. The following accessories are permitted:

1. Automatic amusement devices.
2. Signs in accordance with §6.9.
3. Off-street parking and loading in accordance with §6.11.
4. Accessory buildings as per §6.2.B.
5. Satellite receiving dishes of two feet or less in diameter not located within a required front yard for a principal structure. *11/19/95*

E. The following require a Special Exception from the ZBA:

1. Child day care centers.
2. Group day homes.
3. Nursery schools.
4. Satellite receiving dishes or dish-type antennae in excess of two feet in diameter subject to the following conditions:
   a. Shall not be located between any street line and the building to which it is accessory.
   b. If roof mounted, shall not exceed a height of 15 feet.
   c. Shall be properly screened and/or landscaped. *11/19/95*

F. The following uses are permitted subject to approval of a Zoning Permit.

1. Structure or rooftop mounted antennae, subject to the requirements and procedures listed in §6.25. *05/18/97*

SPECIAL REQUIREMENTS

1. No use shall be open between the hours of 11:00 p.m. and 6:00 a.m.
2. Outside storage of any materials, supplies or products is not permitted.
3. No drive-through windows shall be permitted.

NEIGHBORHOOD BUSINESS DISTRICT

DISTRICT	MINIMUM LOT AREA	MINIMUM LOT FRONTAGE	MINIMUM YARDS FRONT	SIDE	REAR	COVERAGE	HEIGHT
NB	20,000	100	40	20	40	20%	30 FT.

§4.18 NORTH WALLINGFORD IX ZONE

A. Purpose – to temporarily restrict industrial development within the North Wallingford IX Zone in order to thoroughly review a study prepared by Milone & MacBroom, Inc. regarding development in this area and possibly implement the study's recommendations including, but not limited to, the establishment of new Town roads.

B. Applicability – within the North Wallingford IX Zone between the effective date of this regulation and October 1, 2002, the Commission shall not accept or act upon any application for a site plan, Special Permit or change of use except for agriculture, farming, forestry, truck or nursery gardening, including greenhouses, keeping of livestock and poultry. *09/15/01-03/15/02-06/15/02*

§4.19 – HOUSING OPPORTUNITY DISTRICT (HOD)

A. Purpose – To promote affordable housing in the Town and to establish standards for the development of such housing that will be binding on the applicant, its successors and its assigns.

B. The following uses are permitted subject to approval of a site plan in accordance with Article VII:

1. Single-family homes in a common interest community.

C. The following uses require approval of a Special Permit in accordance with §7.5:

1. Public utility buildings and facilities *02/15/03*

D. The following accessory uses are permitted, provided that they are for the use of the common interest community:

1. Accessory uses listed in §4.1.F, except for those enumerated in §4.1.F.7, §4.1.F.10 and §4.1.F.11.

E. Development Standards: The following standards and requirements shall apply to any development in a HOD:

1. The minimum parcel size for a HOD shall be 26 acres and such parcel shall have frontage on South Turnpike Road.
2. The maximum density shall be 3.0 units per acre.
3. The parcel shall be services by sanitary sewers and public water supply.
4. Buffer – Within requires setbacks from the parcel's boundaries, a landscaped buffer area shall be provided wherever necessary:
   a. to protect property values by preserving existing vegetation or planting new materials;
   b. to provide privacy from visual intrusion, light, dirt, and noise; and
   c. to improve the appearance of development with the Town.

   Additional buffering may be required by the Commission to meet the purposes of this section. Existing development on abutting property shall not be deemed as automatically requiring additional buffering.
5. Minimum setbacks:
   a. Setbacks from Property Boundaries:
      Setback from streets classified as thoroughfares – 40 feet
      Setback from property boundary unless otherwise specified – 20 feet
   b. Setbacks from Adjacent Buildings:
      Setback from outer walls of homes – 12 feet
6. Open Space
   The minimum open space area in a HOD shall be 40 percent of the total area.
   a. The Commission may permit the open space (or portion thereof) to be subdivided into a separate, contiguous lot and conveyed to an entity that is organized and empowered to own, operate and maintain land for open space purposes permitted under these regulations, including the Town of Wallingford.

7. Architectural Design:
The architectural design, scale and mass of buildings and other structures, including, among other elements the exterior building material, color, roof-line and building elevations shall be residential in character and feature traditional New England designs so as to harmonize and be compatible with the neighborhood, to protect property values in the neighborhood and to preserve and improve the appearance and beauty of the community.
8. Utilities – All utilities within the site shall be underground.
9. Height – Building height shall not exceed 30 feet.
10. Parking – Parking shall be offered in conformity with the requirements of §6.11.
Parking shall not be permitted in any required property boundary setback area.
All homes in a HOD development will have a one-car garage.
11. Recreational Facilities – Recreational facilities, if any, shall be as centrally located as possible.
12. Exterior Lighting – Exterior roadway lighting shall be provided and maintained by the developer for the safety of vehicular and pedestrian traffic. All exterior lighting shall be low-level except for required street lights. The glare from light sources shall be shielded from roads and abutting properties.
13. Refuse Areas – Refuse collection areas shall be provided and conveniently located for all dwellings. Designated collection areas, if any, shall be screened and supplied with covered receptacles.
14. Storm Drainage – All storm drainage facilities shall be designed and constructed in accordance with the Town Standards, subject to the approval of the Town Engineer.
15. Road Standards – All interior roads shall have a minimum paved width of 24 feet except that cul-de-sac roads of less than 800 feet in length, which are not required to be curbed, may have a minimum paved width of 22 feet. All roads shall be constructed in accordance with standards specified in the Town's Subdivision Regulations except that curbs may be waived at the discretion of the Commission.
16. Fire Hydrants – Fire hydrants shall be installed and located within 500 feet of each dwelling unit.
17. Adherence to Conceptual Site Plan – the development of a parcel that has been rezoned to HOD based on submission of a conceptual plan and architectural renderings, shall, in addition to conformance to HOD standards, be build in substantial conformity with the road layout and architectural design presented on such conceptual site plan.
18. Sidewalks – Sidewalks shall be installed where required by the Commission.
19. Additions and modifications after approval: *11/13/04*
The Commission approves each HOD as a planned development and is concerned over both the architectural design of each unit and the relationship of each building in the development to other buildings in the development. The Commission considers HOD developments to be entirely different types of neighborhoods than those developed under traditional subdivision and zoning standards. In an HOD, no individual lots are created; all land is owned in common. As such, the following policies shall apply:

a. Accessory apartments are not permitted.
b. Additions, including rooms, sun porches, and garages, to individual units, are not permitted.
c. Accessory buildings and swimming polls for the exclusive use of individual units are not permitted.
d. Enlarged decks are not permitted.
e. Only decorative fencing shown on the site plan, owned and maintained by the homeowners' association and approved by the Planning and Zoning Commission, is permitted.

F. The following requirements shall apply to a HOD:

1. HOD Homes shall be of a construction quality that is comparable to market rate homes within the development. The final site plan and plan for administration of affordability rules shall identify the locations within the HOD Development of the HOD Homes.
2. The HOD Homes shall be built on a *pro rata* basis as construction proceeds.
3. In a HOD Development, no HOD Home shall have less than 3 nor more than 4 bedrooms.
4. Calculation of the maximum monthly payment for a HOD Home, so as to satisfy Connecticut General Statute §8-30g, shall utilize the area median income data as published by the U.S. Department of Housing and Urban Development in effect on the day a purchase and sales agreement is executed by the parties.
5. The maximum monthly payment that the owner of a HOD Home shall pay shall not be greater than the amount that will preserve such unit as "affordable housing" as that term is defined in Connecticut General Statutes §8-30g, and shall include periodic mortgage payments, based on a commercially reasonable down payment for affordable housing buyers and prevailing interest rates at the time of sale; taxes; insurance; common charges in the case of ownership of a unit in a common interest community; heat; and utility costs, including hot water and electricity, but excluding telephone and cable television.
However, common interest ownership fees charged to owners of HOD Homes shall not be set by the association so as to cause such owners to pay more than the maximum monthly payment allowed by law. It is recognized that monthly requirements for the other items may reduce what a HOD Home owner may pay to a minimal amount. This limitation on such fees shall be incorporated into common interest ownership documents for the development.
6. HOD Homes shall be occupied only as an owner's principal residence. Renting or leasing of HOD Homes shall be prohibited.
7. At the same time that the market-rate homes in a HOD Development are first advertised to the general public, notice of availability of the HOD Homes shall be provided by advertising such availability in the real estate section of a newspaper of general circulation in the Town of Wallingford, by providing notice to the Wallingford Town Council, the Wallingford Town Clerk, and the Wallingford Planning and Zoning Commission, and through the procedures outlined in the affirmative fair housing marketing plan.
8. For one of every 3 HOD Homes which becomes available for initial sale, preference shall be given to applicants who are otherwise

qualified and are residents or employees of the Town of Wallingford, a child or parent of Wallingford residents or those who meet the criteria of "least likely to apply" as defined in Connecticut Agencies Regulations §8-37ee.

9. Each deed for an HOD Home will contain substantially the following provision:

   This unit is sold as an "affordable home as defined in Connecticut General Statute §8-30g, and is available only to persons or families whose income is at or below eighty percent (80%) or sixty (60%), as applicable, of the area median income for Wallingford or the statewide median income, whichever is less, as determined by the U.S. Department of Housing and Urban Development. This development has been approved by agencies of the Town of Wallingford based in part on the conditions that a defined percentage of homes will be preserved as affordable housing homes. The restrictions related to affordability are required by law to be strictly enforced.

10. The 50 year affordability period shall be calculated separately for each HOD Home in a HOD Development, and the period shall begin on the date, as defined at closing, of occupancy of the Home.

11. In conjunction with an application for approval of a final site plan for a HOD Development, the applicant shall submit an "Affordability Plan," which shall describe how the regulations regarding affordability will be administered. The Plan shall include provisions for administration of and compliance with the provision of this section, notice procedures to the general public of the availability of affordable homes, identification of those homes which are to be designated affordable, procedures for verification and periodic confirmation of unit occupancy income, and compliance with affordability requirements. Such Plan shall also include drafts of documents that will be used in the administration of the affordability restrictions and any explanations which will be provided to the prospective owners concerning such restrictions.

12. The applicant shall also submit an affirmative fair housing marketing plan to govern the sales of all HOD Homes at the time of final site plan approval.

13. A violation of the Regulations contained in this section shall not result in a forfeiture or reversion of title, by the Wallingford Planning and Zoning Commission or its designated agent shall otherwise retain all enforcement powers granted by the Connecticut General Statutes, including the authority under §8-12 to issue notices of violations, to impose fines, and to seek injunctive relief. *10/18/01*

§4.20 WALLINGFORD HOUSING OPPORTUNITY DISTRICT *06/14/03*

A. Purpose: To promote the inclusion of below-market-rate housing units, hereafter referred to as affordable housing units, within private sector residential developments so as to increase the diversity of Wallingford's housing stock pursuant to C.G.S. §8-30(g).

B. Procedure: A WHOD shall be created on a parcel(s) of land after a public hearing pursuant to Article X of these regulations. Before creating a WHOD District, the Planning and Zoning Commission shall make a finding that the proposed development does add to the diversity of housing stock in the Town and that the standards, criteria and conditions listed below have been met.

C. The following uses are permitted subject to approval of a site plan in accordance with Article VII:

1. Single-family and duplex homes in a common interest community.

D. The following uses require approval of a Special Permit in accordance with §7.5:

1. Public Utility buildings and facilities.

E. The following accessory uses are permitted, provided that they are for the use of the common interest community:

1. Accessory uses listed in §4.1.F, except for those enumerated in §4.1.F.7, §4.1.F.10 and §4.1.F.11.

F. Standards: the following standards shall apply:

1. Location –
   a. A WHOD shall only be created in any R-6, 11, 15, 18, RU-40, YLB, DD, or RF zone.
   b. A WHOD shall be located on a parcel of land which has direct access to and frontage on a road classified as a collector, feeder, or thoroughfare by §5.3 of these regulations.
2. Density –
   a. The maximum number of dwelling units permitted shall be
      i 2x the underlying zone for attached units
      ii 2.5x the underlying zone for detached units
      iii 3x the equivalent residential density on commercial parcels based on the "buildable" acreage of the parcel
   b. For purposes of this section, buildable acreage shall be determined by taking the total parcel minus
      i 100% of all wetlands and watercourses
      ii all land with slopes over 25%
      iii floodway and floodplain areas
      iv land subject to easements for above ground utilities
3. Parcel size, setbacks, etc. –
   a. Minimum parcel size shall be 6 acres.
   b. Maximum parcel size shall be 15 acres.
   c. All buildings shall be a minimum of twice the setback of the underlying zone from the original parcel boundaries. If a single-family subdivision is proposed, there shall be no minimum setback from any new property boundaries which are created.
   d. There shall be a minimum of 20 feet between buildings.
   e. The maximum building height shall be 30 feet.
4. Architectural Design – The architectural design, scale and mass of buildings and other structures, including, among other elements the

exterior building material, color, roof-line and building elevations shall be residential in character and feature traditional New England designs so as to harmonize and be compatible with the neighborhood, to protect property values in the neighborhood and to preserve and improve the appearance and beauty of the community; in particular:

a. All duplex units included in a WHOD shall be designed in townhouse or garden apartment type construction. There shall be no more than 1 dwelling unit or portion thereof located above another dwelling unit.
b. Each dwelling unit shall have an entrance providing direct access to the exterior, which access shall not be shared in common with any other dwelling units.
c. Dwelling units shall contain no less than 1 nor more than 3 bedrooms.

5. Open Space - Multiple buildings on a single lot shall be clustered to ensure that 30% of the lot is one contiguous parcel having a meaningful shape, character and location to provide useable active or passive open space.
6. Utilities –
   a. The parcel shall be serviced by Wallingford water and sewer.
   b. All utilities shall be underground.
7. Buffers – within required setbacks from the parcel's boundaries, a landscaped buffer shall be provided whenever necessary:
   a. To protect property values by preserving existing vegetation or planting new material,
   b. to provide privacy from visual intrusion, light, dirt and noise, and
   c. to improve the appearance of development within the Town.
   d. In cases where topography, natural features, existing vegetation or compatible land uses do not make a larger buffer necessary, the minimum planted buffer shall be 50% of the required building setback. Additional buffering may be required by the Commission to meet the purposes of this section to protect existing residential uses or to protect residents of the WHOD from existing commercial uses.
8. Parking – Parking shall be provided in conformity with the requirements of §6.11. Parking shall not be permitted in any required property boundary setback area. All homes in an HOD development will have a one-car garage.
9. Recreational Facilities – Recreational facilities, if any, shall be as centrally located as possible.
10. Exterior Lighting – Exterior roadway lighting shall be provided and maintained by the developer for the safety of vehicular and pedestrian traffic. All exterior lighting shall be low-level except for required street lights. The glare from light sources shall be shielded from roads and abutting properties.
11. Refuse – Refuse collection shall be by individual curbside pickup.
12. Storm Drainage – All storm drainage facilities shall be designed and constructed in accordance with the Town Standards, subject to the approval of the Town Engineer.
13. Road Standards – All interior roads shall have a minimum paved width of 24 feet except that cul-de-sac roads of less than 800 feet in length, which are not required to be curbed, may have a minimum paved width of 22 feet. All roads shall be constructed in accordance with standards specified in the Town's Subdivision Regulations except that curbs may be waived at the discretion of the Commission. Individual driveways onto existing Town roads shall be prohibited.
14. Fire Hydrants – Fire hydrants shall be installed and located within 500 feet of each dwelling unit.
15. Adherence to Conceptual Site Plan – The development of a parcel that has been re-zoned to WHOD based on submission of a conceptual plan and

architectural renderings, shall, in addition to conformance to WHOD standards, be built in substantial conformity with the road layout and architectural design presented on such conceptual site plan.

16. Sidewalks – Sidewalks shall be installed on both sides of all new streets.
17. Landscaping – In addition to a landscaped buffer, foundation plantings and landscaped parking areas per §6.14.E shall be required.
18. A school bus shelter shall be required at the main entrance.
19. Additions and modifications after approval: *11/13/04*
    The Commission approves each WHOD as a planned development and is concerned over both the architectural design of each unit and the relationship of each building in the development to other buildings in the development. The Commission considers WHOD developments to be entirely different types of neighborhoods than those developed under traditional subdivision and zoning standards. In a WHOD, no individual lots are created; all land is owned in common. As such, the following policies shall apply:
    a. Accessory apartments are not permitted.
    b. Additions, including rooms, sun porches and garages, to individual units, are not permitted.
    c. Accessory buildings and swimming pools for the exclusive use of individual units are not permitted.
    d. Enlarged decks are not permitted.
    e. Only decorative fencing shown on the site plan, owned and maintained by the homeowners' association and approved by the Planning and Zoning Commission, is permitted.

G. The following requirements shall apply to a WHOD:

1. WHOD Homes shall be of a construction quality that is comparable to market rate homes within the development. The final site plan and plan for administration of affordability rules shall identify the locations within the WHOD Development of the WHOD Homes.
2. The WHOD Homes shall be built on a *pro rata* basis as construction proceeds.
3. In a WHOD Development, no WHOD Home shall have less than 1 nor more than 3 bedrooms.
4. Calculation of the maximum monthly payment for a WHOD Home, so as to satisfy Connecticut General Statute §8-30g, shall utilize the area median income data as published by the U.S. Department of Housing and Urban Development in effect on the day a purchase and sales agreement is executed by the parties.
5. The maximum monthly payment that the owner of a WHOD Home shall pay shall not be greater than the amount that will preserve such unit as "affordable housing" as that term is defined in Connecticut General Statutes §8-30g, and shall include periodic mortgage payments, based on a commercially reasonable down payment for affordable housing buyers and prevailing interest rates at he time of sale; taxes; insurance; common charges in the case of ownership of a unit in a common interest community; heat; and utility costs, including hot water and electricity, but excluding telephone and cable television.

   However, common interest ownership fees charged to owners of WHOD Homes shall not be set by the association so as to cause such owners to pay more than the maximum monthly payment allowed by law. It is recognized that monthly requirements for the other items may reduce what a WHOD Home owner may pay to a minimal amount. This limitation on such fees shall be incorporated into common interest ownership documents for the development.

6. WHOD Homes shall be occupied only as an owner's principal residence. Renting or leasing of WHOD Homes shall be prohibited.
7. At the same time that the market-rate homes in a WHOD Development are first advertised to the general public, notice of availability of the WHOD Homes shall be provided by advertising such availability in the real estate section of a newspaper of general circulation in the Town of Wallingford, by providing notice to the Wallingford Town Council, the Wallingford Town Clerk, and the Wallingford Planning and Zoning Commission, and through the procedures outlined in the affirmative fair housing marketing plan.
8. For one of every 3 WHOD Homes which becomes available for initial sale, preference shall be given to applicants who are otherwise qualified and are residents or employees of the Town of Wallingford, a child or parent of Wallingford residents or those who meet the criteria of "least likely to apply" as defined in Connecticut Agencies Regulations §8-37ee.
9. Each deed for a WHOD Home will contain substantially the following provision:

> This unit is sold as an "affordable home as defined in Connecticut General Statute §8-30g, and is available only to persons or families whose income is at or below 80% or 60%, as applicable, of the area median income for Wallingford or the statewide median income, whichever is less, as determined by the U.S. Department of Housing and Urban Development. This development has been approved by agencies of the Town of Wallingford based in part on the conditions that a defined percentage of homes will be preserved as affordable housing homes. The restrictions related to affordability are required by law to be strictly enforced.

10. The 60 year affordability period shall be calculated separately for each WHOD Home in a WHOD Development, and the period shall begin on the date, as defined at closing, of occupancy of the Home.
11. In conjunction with an application for approval of a final site plan for a WHOD Development, the applicant shall submit an "Affordability Plan," which shall describe how the regulations regarding affordability will be administered. The Plan shall include provisions for administration of and compliance with the provision of this section, notice procedures to the general public of the availability of affordable homes, identification of those homes which are to be designated affordable, procedures for verification and periodic confirmation of unit occupancy income, and compliance with affordability requirements. Such Plan shall also include drafts of documents that will be used in the administration of the affordability restrictions and any explanations which will be provided to the prospective owners concerning such restrictions.
12. The applicant shall also submit an affirmative fair housing marketing plan to govern the sales of all WHOD Homes at the time of final site plan approval.
13. A violation of the Regulations contained in this section shall not result in a forfeiture or reversion of title, but the Wallingford Planning and Zoning Commission or its designated agent shall otherwise retain all enforcement powers granted by the Connecticut General Statutes, including the authority under §8-12 to issue notices of violations, to impose fines, and to seek injunctive relief.

§4.21 - HOUSING OPPORTUNITY DISTRICT - MULTI-FAMILY (HOD-MF) *04/17/04*

A. Eligible Parcel:
In addition to the parcel identified as eligible for development as an HOD in §4.19.D.1, an HOD may be developed on the following parcel:

1. Property exceeding 6.0 acres, located on the west side of and having frontage on South Turnpike Road.

B. Modifications of HOD Standards:
For development of the eligible parcel identified in §4.20.A.1 as HOD, the standards and requirements stated in §4.19 shall be utilized, with the following modifications:

1. In lieu of the permitted use stated in §4.19.B.1, the permitted use shall be multi-family residential development, provided that each dwelling unit shall contain no more than 3 bedrooms.
2. In lieu of §4.19.D.2, the maximum density shall be 6.0 units per acre.
3. In lieu of §4.19.D.5.b, the minimum setback between the outer walls of adjacent residential buildings shall be 20 feet.
4. In lieu of §4.19.D.6.a, the minimum open space area shall be 45% of the total area.

C. Except as otherwise provided in this subsection, an HOD-MF development shall adhere to all limitations, standards and requirements set forth in §4.19.

§4.22 – Tracy Zone (T-30)

A. PURPOSE – To allow general commercial and office development in designated areas located on or near major streets

B. The following uses are permitted subject to approval of a Zoning Permit in accordance with §8.3:
   1. Any use permitted in §4.1B.
   2. Two and three family homes, subject to:
      a. All parking shall be located in side or rear yards.
   3. Structure or rooftop mounted antennas, subject to the requirements and procedures listed in §6.25.

C. The following uses are permitted subject to Site Plan approval in accordance with Article VII:
   1. Educational, religious, or philanthropic uses by a non-profit corporation or governmental unit, excluding correctional institutions.
   2. Boarding and rooming houses.
   3. Offices and financial institutions.
   4. Restaurants and other food service facilities with or without a liquor permit.
   5. Self-service, clothes-cleaning establishments.
   6. Stores and shops where goods are sold and services are rendered primarily at retail.
   7. Clubs.
   8. Cafes and taverns subject to:
      a. Permanent outdoor patios shall be surrounded by a 5 foot tall white vinyl fence with the finished side facing out.
      b. Square footage within the patio shall be included as café/tavern square footage for parking purposes.
   9. Temporary construction offices.
   10. Museums or art galleries.
   11. Governmental buildings, facilities and uses.
   12. Public utility buildings and facilities.
   13. Dance studios.
   14. Veterinary hospitals for small animals, provided that the animals housed overnight are kept in a building and that it does not provide boarding.
   15. Business and trade schools.
   16. Wholesale trade carried on entirely within a building or enclosure of suitable height to screen the operation from the street and any nearby residence district.
   17. Health and/or sports clubs, billiard and pool parlors, dance halls, bowling alleys, and similar places of public recreation operated as a business.
   18. Storage warehouses.
   19. Retail lumber, fuel and building material yards and contractor’s equipment storage, provided that all material is kept in a building or within an enclosure of suitable height to screen the operation from the street and any nearby residence district, but excluding the bulk storage of cement and concrete mixing and excluding tanks for petroleum products having a capacity greater than 10,000 gallons.
   20. Manufacturing, compounding, processing, packaging and assembling materials and products.
   21. Saw and planning mills and woodworking shops.
   22. Machine and blacksmithing shops.
   23. Outpatient medical treatment facility.

D. The following permitted uses require the approval of a Special Permit in accordance with §7.5:

1. Motor vehicle repair garages, including welding and tire recapping, provided that all mechanical and repair operations are carried on in a building or within an enclosure of suitable height to screen the operation from the street and any nearby residence district.
2. Vehicle fueling/charging and/or service stations, including auto detailing, car washes, oil change facilities, and similar facilities. Location of dispensing appliance shall be subject to the determination of the Commission per the Special Permit application; however, under no circumstances shall any gasoline dispensing appliance be located within 25 feet of any street or property line. 07/29/19
3. Automobile, truck, farm, motorcycle and related equipment dealerships.
4. Temporary mobile office.
5. Uses in this zoning district generating 100 peak-hour vehicle trips or more using the standards set forth in the most recent edition of Trip Generation, ITE or a more accurate source, if available, subject to the following:
   a. Submission of a traffic impact analysis containing present roadway conditions, existing roadway capacity, existing and projected traffic volumes (ADT, peak a.m. and peak p.m.), existing and proposed sight lines, site generated traffic and traffic distributions, and traffic accident experience.
   b. A traffic impact analysis will be required:
      1. For an addition to an existing use, which use is now under the provisions of this section, and
      2. when an addition to an existing use brings that use under the provisions of this section.
      3. The traffic impact analysis shall cover the entire use, not merely the addition.
   c. No traffic impact analysis or Special Permit will be required for an addition to an existing Special Permit use if the addition generates 25 peak-hours vehicle trips or less. This provision shall be permitted to be used one time over the life of the use on a specific site.
   d. In all cases in which the Commission feels that a peer review of the applicant's traffic impact analysis is warranted, the applicant shall be required to reimburse the Town for the cost of the peer review. This payment shall be made to the Town prior to the decision by the Commission on the application.
6. Adaptive re-use to multi-family as per §6.16
7. Excavation and filling of land as per §6.10.
8. Golf driving rages, miniature golf courses, archery ranges, and other places of outdoor public entertainment operated as a business.
9. Multi-family dwelling units in existing or new buildings, subject to the following: *09/19/09*
   a. Each lot shall contain a minimum of 25,000 sq.ft.

   b. Minimum lot area per dwelling unit shall be based upon the following:

UNIT SIZE	UNITS/ACRE
One-bedroom units	20
Two-bedroom units	15
Three-bedroom units	10

c. The required floor area per dwelling unit shall be:

UNIT SIZE	MINIMUM FLOOR AREA (Sq. Ft.)
1 bedroom	500
2 bedroom	575
3 bedroom	650

d. The lot shall be served by sanitary sewers and public water supply.
e. Bulk requirements shall be in accordance with §5.1.B.
f. Parking shall be in accordance with §6.11.
g. Landscaping shall be in accordance with §6.14 except that all parking areas within 20 feet of abutting properties or a street shall be surrounded with a minimum of 5 foot buffer area per §6.14.D.4.
h. Lots abutting the Quinnipiac River shall maintain a minimum 50 foot Greenbelt in accordance with §6.4.B.

E. The following accessory uses are permitted:

1. Automatic amusement devices.
2. Signs in accordance with §6.9.
3. Off-street parking and loading in accordance with §6.11.
4. Accessory buildings as per §6.2.B.
5. Outside storage as per §6.12.

F. The following uses require a Special Exception from the ZBA:
1. Child daycare centers.
2. Group day homes.
3. Nursery schools. *01/13/07*

G. The following uses are permitted and do not require any zoning approval:
1. Mobile Food Vendor, provided any of the following conditions are met:
   a. Will not be located/parked on a property for more than twenty 20) days in any 365-day period; OR
   b. Is not located on the same property for more than four (4) hours in any 24-hour period. *06/14/14*

§4.23 – Wallingford Incentive Housing Zone – *08/23/14*

A. Purposes. The Wallingford Incentive Housing Zone is an overlay district whose purposes are:
   1. To promote the revitalization of downtown Wallingford by encouraging mixed-use development that will provide for a variety of housing and business opportunities.
   2. To provide the opportunity for the downtown to transform into a retail environment that offers a distinctive experience for consumers.
   3. To encourage smart growth and low-impact development.
   4. To promote the development of a transit-oriented, pedestrian-friendly, downtown community within walking distance to the Wallingford stop on the Springfield-New Haven commuter line. It is recommended that the platform be located toward the northern end of the IHZ to avoid traffic congestion on Quinnipiac Street and Hall Avenue during train stops.
   5. To assist the Town of Wallingford in complying with the State Zoning Enabling Act, Connecticut General Statutes § 8-2, by adopting zoning regulations that promote housing choice and economic diversity, including housing for moderate income households.
   6. To ensure high quality site planning, architecture, and landscape design that is consistent with the surrounding residential neighborhoods and the distinct visual character of the historic structures in downtown Wallingford.
   7. To establish development standards that ensure context-sensitive design and creative site planning in the reuse of existing buildings and construction of new buildings.
   8. To benefit from the financial incentives provided by Connecticut General Statutes §8-13m et seq.

B. Location. The boundaries of this IHZ Overlay District are shown on the Wallingford Zoning Map. The IHZ Overlay District is further divided into three sub-districts as shown on the map: Downtown Core, North Cherry Street, and Meadow Street.

C. Applicability. The regulations and design standards in this §4.23 shall apply to any proposed Incentive Housing Development within the IHZ Overlay District.
   1. Because the IHZ Overlay District is an overlay zone, the provisions of the underlying zoning district shall not apply to a proposed Incentive Housing Development, and such underlying zoning designation shall terminate upon approval of a site plan of an Incentive Housing Development. Reinstatement of the underlying zoning shall require a zone change approved by the Commission, and shall only be approved if the Incentive Housing Development is not constructed.
   2. The provisions of other sections of the Wallingford Zoning Regulations shall apply to an Incentive Housing Development proposal except for the following:
      a. All Incentive Housing Developments shall provide required parking on the same property as Development is located. Required on-site parking shall be governed by Section F.1 of this regulation.
      b. All landscaping and buffer requirements shall be covered by Section L of this regulation.
      c. All signage shall be governed by Sec. J of this regulation.
      d. All dimensional standards shall be governed by Section E of this regulation.
      e. The application process shall be governed by Sec. G of this regulation.
   3. Existing buildings in the IHZ which have been renovated utilizing

federal and/or state tax credits may not be demolished, but may be expanded.

D. Description of Sub-Districts.

1. Downtown Core Sub-District. This area, the primary focus of the IHZ Overlay District, includes 40 parcels with 40 existing buildings (not including sheds and similar structures), on 10.01 acres of developable land as defined in General Statutes §§ 8-13m(3), now or previously used for retail, office, industrial or residential. This area has seen significant disinvestment in recent years and many buildings are in need of attention or have become obsolete. Many buildings in this area are single story, creating a spread out land use pattern that is not conducive to pedestrian traffic. By encouraging the use of vertical space in this compact area, the vitality and livability of the downtown will be enhanced, drawing more customers for businesses and increasing the tax base. To that end, the following principles shall be utilized for developing and reviewing Incentive Housing Development proposals within the Downtown Core:

   a. Promote a mix of uses with retail on the street level and office and residential uses above street level. An increase in residential units, providing "round the clock" population, will help to reinvigorate the downtown core with activity, including retail, office, and passive recreation.

   b. Coordinate development with, and encourage use by residents of, the rail line stop that is located within the Overlay District.

   c. Maintain a design form in placement of buildings that will encourage walkability by placing buildings at or close to the edge of sidewalks that will, with architecture and window displays at the street level, promote visual interest.

   d. Coordinate infrastructure and streetscape enhancements with the public sector and other developments within the district. New development shall propose improvements to the public infrastructure including traffic controls, sidewalks, crosswalks, street lighting, underground utilities, street trees, and landscaping including window boxes and modest planters. A well-designed streetscape will contribute to a sense of safety and of the walkability of the area. Safe and convenient sidewalks leading through blocks to parking areas and other public spaces shall be part of the design and shall include ample street lighting as well as highly visible landscaping and landscape screening of less appealing vistas. Wayfinding signage shall coordinate with the overall district wayfinding system, to assist pedestrians and drivers in locating their destinations, public parking areas, and public transit.

   e. Promote creativity and variety. The IHZ design standards are meant to promote creativity and variety in building design.

   f. Promote sustainable and energy-efficient design and construction. Sustainable construction techniques and materials shall, to the extent practicable be incorporated into new construction and, to the extent practicable, renovation and rehabilitation projects. Energy efficiency shall be a central goal in selection of lighting, windows, materials, insulation, and HVAC systems. Buildings shall be sited, oriented, and designed with orientation to the sun and wind in mind as well. Applicants shall consider certification by LEED or similar rating programs, including any requirements to utilize such programs as well as the use of low-impact development techniques.

g. Protect and preserve the historic character of specific buildings in the downtown Core, including the railroad station, the "Hall-Elton" building, and the retail block at the southeast corner of Quinnipiac Street and South Cherry Street.

2. North Cherry Street Sub-District. This area of the IHZ includes three parcels with six existing buildings on 4.29 acres of developable land as defined in General Statutes §§ 8-13m(3), all of which are industrial uses or are abandoned. Moving the train station platform to the north a sufficient distance from Quinnipiac Street and Hall Avenue to eliminate cross-town traffic congestion created by stopped trains would be beneficial. Therefore, the intent of this sub-district is to allow transit uses – primarily a new train platform and station which would serve the needs of the commuter rail as well as existing Amtrak service - and to encourage residential uses and office and limited retail uses. Development on the west side of North Cherry Street is primarily residential, and the goal is to create a neighborhood that provides a transition between those residential uses and the non-residential uses to the east, including the commuter rail facility. The following principles shall be utilized for developing and reviewing Incentive Housing Development proposals within the North Cherry Street sub-district:

a. Promote a form of building placement and site design that creates a landscape that is somewhere between a village and an urban setting. The three largest existing buildings in this sub-district have the potential for adaptive reuse into residential units, and applicants shall make use of the existing buildings to the extent practicable. To the extent feasible, new development shall be designed with setbacks consistent with shall not be located between the building and the street.

b. Coordinate infrastructure improvements with the public sector. As in the other sub-districts, create an environment that is conducive to walking and use of non-vehicular modes of transportation. A sidewalk exists along the west side of the street in this sub-district, and any project within this sub-district shall include construction of a sidewalk on the east side, crosswalks, street lighting, and street trees. A well-designed streetscape contributes to an improved sense of safety and walkability, which is critical in this sub-district given the rail facility. Safe and convenient sidewalks leading to the train station as well as any other public spaces shall be part of the design for all projects, and shall include ample lighting and landscaping. Where applicable, wayfinding signage shall be installed that coordinates with an overall district wayfinding system to assist pedestrians and drivers in locating their destinations and public transit.

c. Promote creativity and variety in development. The IHZ design standards are meant to promote creativity and variety in building design. Given the limited size of this sub-district, a variety of building styles is not practical, but if the three largest buildings are retained, diversity will occur. New development shall be designed to complement but not mimic the adjacent properties, including the properties on the west side of North Cherry Street.

d. Promote sustainable and energy-efficient design and construction. Sustainable construction techniques and materials shall, to the extent applicable be incorporated into new construction and, to the extent practicable, renovation and rehabilitation projects. Energy efficiency shall be a central

goal in selection of lighting, windows, materials, insulation, and HVAC systems. Sites shall be sited, oriented, and designed with orientation to the sun and wind in mind as well. Applicants shall consider certification by LEED or similar rating programs, including any requirements to utilize such programs as well as the use of low-impact development techniques.

3. Meadow Street Sub-District. This small area currently has five parcels and four structures on 0.69 acres of developable land as defined in General Statutes §§ 8-13m(3). There are currently nine units in the four residential buildings within this sub-district, and no other uses. The parcels directly across Meadow Street and Church Street from this sub-district are residential, and the intent of this sub-district is to maintain a residential character. To that end, non-residential uses are not permitted under the IHZ Overlay Zoning in this sub-district. The following principles shall be utilized for developing and reviewing Incentive Housing Development proposals within the Meadow Street sub-district:
   a. Maintain a village form of design and building placement. In contrast to the Downtown Core Sub-District, the Meadow Street Sub-District is in a dense residential area where small front lawns with landscaping and picket fences are appropriate. Parking facilities shall not dominate the streetscape, and such facilities shall have as little impact on the streetscape as possible.
   b. Coordinate infrastructure improvements with the public sector. As in the other sub-districts, create an environment that is conducive to walking. A sidewalk already exists along the street frontages in this sub-district, and any project within this sub-district shall include improvements to the sidewalk, crosswalks, street lighting, and street trees.
   c. Promote creativity and variety in development. While there is limited space in this sub-district to incorporate multiple building designs, incorporate a variety of architectural details within the building design to add visual interest appropriate to a dense residential neighborhood.
   d. Promote sustainable and energy-efficient design and construction. Sustainable construction techniques and materials shall, to the extent practicable be incorporated into new construction and, to the extent practicable, renovation and rehabilitation projects. Energy efficiency shall be a central goal in selection of lighting, windows, materials, insulation, and HVAC systems. Applicants shall consider certification by LEED or similar rating programs, including any requirements to utilize such programs as well as the use of low-impact development techniques.

E. Permitted Uses and Dimensional Requirements. The following uses are permitted subject to Site Plan Approval in accordance with §4.23G.

1. Downtown Core
   a. Mixed use development at a minimum density of twenty (20) and a maximum density of twenty six (26) dwelling units per acre (fractional numbers shall be rounded down), provided that:
      i. offices shall only be located on a second, third, or fourth floor, and shall occupy no more than twenty-five percent (25%) of the gross floor area of the building;

ii. residential uses shall not be located at street level along the public way (they may be on the ground floor facing a courtyard at the back of the building); and

iii. separate and distinct entrances shall be provided for first floor and upper story uses.

b. Public transportation

2. North Cherry Street

a. Multi-family residential development at a minimum density of twenty (20) and a maximum density of twenty-six (26) dwelling units per acre (fractional numbers shall be rounded down)

b. Public transportation

c. Mixed use development at a minimum density of twenty (20) and a maximum density of twenty-six (26) dwelling units per acre (fractional numbers shall be rounded down), provided that:

i. retail and office uses are permitted only on the first floor; and

ii. retail uses are limited to a maximum of fifteen percent (15%) of the gross floor area of the first floor.

iii. separate and distinct entrances shall be provided for first floor and upper story uses.

3. Meadow Street

a. Townhouse residential development at a minimum density of ten (10) and a maximum density of fifteen (15) dwelling units per acre (fractional numbers shall be rounded down)

4. Dimensional Standards

Sub-District	*Downtown Core*	*North Cherry*	*Meadow*
Permitted use	Mixed-Use	Multi-Family	Townhome
Min Lot Size	25,000 sq. ft.	25,000 sq. ft.	entire sub-district
Frontage	60'	50'	NA
Min. Setback – Front	0'	15'	10'
Max. Setback - Front	10'	20'	20'
Min. Setback – Side	0'	0'	0'
Min. Setback – Rear	12', except 0' to railroad ROW	0'	40'
Height	45'	45'	30'

5. Renovation of existing buildings shall expand existing footprints only insofar as such expansion is in compliance with the required dimensional requirements for new buildings.

6. The Commission may waive the requirement for minimum lot size only if the following criteria are met:

a. The proposed Incentive Housing Development will eliminate existing structures that contribute to the unsightly or depressed appearance of the district;

b. Either the adjacent properties are not within the Incentive Housing Zone or are not available for consolidation with the proposed Incentive Housing Development; and

c. The scale, architectural design, and site design of the proposed Incentive Housing Development complement the surrounding properties and will not create undue adverse impacts on such properties.

d. The Commission may waive the minimum lot size for the privately owned portions of a public-private partnership project where it is in the best interest of the Town to retain ownership of a portion of the redevelopment site.

F. The following accessory uses are permitted in all sub-districts:

1. Off-street parking and loading shall be provided in accordance with §6.11, except as follows:
   a. The number of parking spaces required per dwelling unit shall be 1.5
   b. All required parking shall be provided on the lot on which the Incentive Housing Development is located
   c. The total parking requirements for a mixed-use Incentive Housing Development shall be: Multiply the minimum parking requirement for each individual use by the appropriate percentage for each of the five (5) designated time periods and then add the resulting sums for each vertical column. The column total having the highest total value is the minimum shared parking space requirement for that combination of land uses.

PARKING CREDIT SCHEDULE CHART

	Weekday Night Midnight To 7:00 a.m.	Weekday Day 7:00 a.m. To 5:00 p.m.	Weekday Evening 5:00 p.m. To Midnight	Weekend Day 6:00 a.m. To 6:00 p.m.	Weekend Evening 6:00 p.m. To Midnight
Residential	100%	60	90	80	90
Office	5%	100	10	10	5
Retail	5%	80	90	100	70
Restaurant	10%	50	100	50	100
Entertainment/ Recreation	10%	40	60	80	100
Parking Required					

   d. Parking Dimensions:
      i. Dimensions of parking spaces shall be nine (9) feet by eighteen (18) feet for ninety (90) degree parking, ten and a half (10.5) feet by twenty (20) feet for sixty (60) degree angled parking, and nine (9) feet by twenty one (21) feet for parallel parking.
      ii. Aisle widths shall be twenty four (24) feet for ninety (90) degree parking, eighteen (18) feet for sixty (60) degree parking, twelve (12) feet for parallel parking in a one-way circulation design, and twenty four (24) feet for parallel parking in a two-way circulation design.
   e. Parking Garages:
      i. Whenever feasible, garages shall be located underground or within the interior of the block to minimize visibility from public streets, and design shall match proportions of neighboring buildings. When a garage must be located adjacent to the street, setbacks may be increased by the Commission to allow for trees to be planted to provide visual softening of the upper levels of the structure.

ii. The ground level of parking structures shall be separated from the public sidewalks with retail building space, unless a suitable alternative is proposed. Landscaping in combination with architectural details on otherwise blank walls of a garage may be a suitable alternative where there is insufficient space for a building.

iii. Garage access points shall be clearly identified with architectural elements and signage.

iv. Garage access points shall be located to minimize the impact of vehicular turning movements on safe and efficient movement of pedestrians, cyclists, and other vehicles, and shall not be located within fifty (50) feet of any street intersection.

v. Signage and light fixtures within the parking structure shall not directly illuminate or produce disability glare on adjacent properties.

f. Surface Parking:

i. Parking shall not be located in front yards unless there is no possible alternative and only for renovation of existing buildings, and in such cases the Commission may require a greater amount of landscaping to reduce the impact of the parking on the streetscape.

ii. Parking shall be set back a minimum of ten (10) feet from front property lines.

iii. Parking that is visible from streets or public sidewalks shall be screened with a combination of landscaping and wrought-iron fencing, brick walls, stone walls, or earthen berms, such that the screening is a minimum of three (3) feet higher than the level of the parking lot and forms a substantially opaque screen.

iv. Landscaping around and within parking lots shall be designed with low-impact development techniques to allow storm water runoff to drain into the landscaped areas to supplement irrigation and to pre-treat the runoff.

v. The use of permeable pavements or surface materials is encouraged to allow infiltration of storm-water runoff.

g. Solid waste receptacles shall be located and designed for ease of access of solid waste removal services to the site and must be located within a garage (trash cans) or in a free-standing "trash house" (dumpsters). A trash house shall be designed with architectural details to incorporate it into the overall development and to minimize aesthetic impacts. Gates shall be designed to be self-closing.

G. Application Process.

1. Pre-Application Review. Applicants are encouraged to participate in a pre-application meeting with the Town staff. The purpose of this pre-application meeting is to obtain the advice and direction of the staff prior to filing the application.

2. Application Requirements. As part of any application for an Incentive Housing Development, the Applicant must submit the following:

a. Sixteen (16) copies of the site plan, utility plan, landscaping plan, topographic plan, erosion and sedimentation control plan, and other information, following the requirements for each as stated in § 7.4 of the Wallingford Zoning Regulations. In addition, architectural drawings shall be submitted for each application, and shall show sufficient detail for all sides of the building(s) to determine compliance with the Design Standards set forth in this §4.23.

b. Site plan application fees, as specified in the Commission's fee schedule.
c. Submission shall be made to the Commission at least one day prior to a regular meeting.

3. Professional Consultant Review Fees. When the Commission determines that a peer-review of the technical aspects of an application for an Incentive Housing Development is required to enable the Commission to render a reasonable decision, the Commission may require, after notice of estimated amount, the Applicant to pay the fees for professional consultants. Such fees shall be estimated and documented for the Town, in writing, by the professional consultant that will conduct the peer review. The fee shall be provided in full to the Town prior to the Town entering into an agreement or contract with the professional consultant and prior to the commencement of any work on the peer review by the professional consultant. Such fees shall be accounted for separately by the Town from other moneys and maintained in an interest-bearing account and used only for expenses associated with the technical review of the application by consultants who are not otherwise salaried employees of the Town or the Commission. Any amount in the account remaining after payment of all expenses for technical review, including any interest accrued, shall be returned to the Applicant no later than forty-five (45) days after the completion of technical review.

4. Referrals to Town Agencies. The Commission may refer copies of an Incentive Housing Application to other Town agencies as necessary to determine compliance with municipal ordinances.

5. Public Hearing. A public hearing shall be conducted for any site plan or subdivision application seeking approval for an Incentive Housing Development. The public hearing shall be conducted in accordance with the requirements of Chapters 124 or 126 and §§ 8-13a et seq., as applicable, of the Connecticut General Statutes, as applicable.

6. The time limits for rendering a decision on a site plan for an Incentive Housing Development shall be governed by the Connecticut General Statutes, as applicable.

7. An application for an Incentive Housing Development shall be approved by the Commission provided it is consistent with the Wallingford Zoning Regulations.

8. Conditions shall be imposed on an Incentive Housing Development approval by the Commission only as necessary:
   a. to ensure substantial compliance of the proposed development with the requirements of the incentive housing zone regulations including the design standards, or
   b. to mitigate any extraordinary adverse impacts of the development on nearby properties.

9. An application for an Incentive Housing Development may be denied only if:
   a. the development does not meet the requirements set forth in the Wallingford Incentive Housing Zone regulations, or
   b. the Applicant failed to submit information and fees required by the Regulations and necessary for an adequate and timely review of the design of the Incentive Housing Development or potential development impacts, or

c. it is not possible to adequately mitigate significant adverse project impacts on nearby properties by means of conditions acceptable to the Applicant.

d. The Applicant refuses to pay for reasonable professional consultant review fees.

H. Incentive Housing Requirements

1. The following regulations shall govern the residential units in an Incentive Housing Development:

a. Twenty percent (20%) of all dwelling units constructed in an Incentive Housing Development shall be Incentive Housing Units. When a calculation performed under this subsection results in a number that includes a fraction, the fraction shall be rounded up to the next whole number.

b. Incentive Housing Units shall be rented or sold to and occupied only by Eligible Households.

c. Each Incentive Housing Unit shall be subject to an Incentive Housing Restriction, which shall be recorded on the Wallingford Land Records. All Incentive Housing Restrictions must include, at a minimum, the following:

i. A description of the Incentive Housing Development, including whether the Incentive Housing Units, at the time of initial occupancy, will be rented or owner-occupied.

ii. An identification of the Incentive Housing Units.

iii. The name and address of the Incentive Housing Administrator.

iv. A requirement that only an Eligible Household may reside in an Incentive Housing Unit.

v. The formula pursuant to which rent of a rental unit or the maximum sale or resale price of a homeownership unit will be calculated.

vi. The term of the Incentive Housing Restriction, which shall be a minimum of fifty (50) years, calculated on a per unit basis from the date of the initial residential occupancy of each Incentive Housing Unit.

vii. Provision for monitoring and enforcement of the terms and provisions of the Incentive Housing Restriction by the Commission.

viii. Provision that the Incentive Housing Administrator shall file an annual report to the Commission, in a form specified by the Commission, certifying compliance with the provisions of this §4.23.

I. Building Design Standards

1. Proposed development projects shall complement the scale and architecture of adjacent buildings, once a streetscape has been established through redevelopment. For early projects, new construction will set the stage for future redevelopment, and shall be constructed to meet the goals of the IHZ to the greatest extent practicable (i.e. maximum height, minimum setbacks, greatest density, etc.).

2. In the Downtown Core Sub-District, buildings shall be placed within two (2) feet of the edge of the sidewalk, or at the property line if it is greater than two (2) feet from the edge of the sidewalk or public right-of-way. Waivers may be granted to this requirement for buildings with restaurants designed with café type outdoor seating areas or where architectural renderings or models of the existing and proposed streetscape for the project and surrounding properties are

presented which clearly show a public benefit to the alternative building placement being proposed.

3. Façades
   a. Buildings more than sixty (60) feet in length shall be broken down into a series of smaller elements or "bays" to evoke the rhythm of historic shop fronts and mixed use town centers and to add to the visual character and maintain the pedestrian scale of the streetscape. To accomplish this, façades on such buildings shall incorporate wall plane projections or recesses having a depth of at least two (2) feet which extend at least twenty percent (20%) of the length of the façade.
   b. Ground-floor façades that face public streets shall have display windows, entry doors with awnings, fanlights, or other such features that emphasize a pedestrian scale.
   c. No uninterrupted length of any façade, whether at ground level or on upper stories, shall be permitted to exceed the lesser of forty percent (40%) of the total length of the façade or forty (40) feet without incorporating a change in color, material, or texture and a projection, recess, window, balcony, trellis, or similar architectural feature.
   d. Façade design shall incorporate a distinction between the ground level floor and the upper stories, using banding, smaller windows on upper stories, balconies, and other architectural elements that are appropriate to the scale and design of the building.
   e. Placement of windows and other major architectural features on upper stories of a building façade shall, to the extent practicable, align with those of adjacent buildings, and shall be arranged with a balanced spacing and evident rhythm. Windows shall also align vertically with those of stories above and/or below. To modulate their scale, multi-story buildings shall articulate the base, middle, and top by separating with cornices, string cornices, step-backs, or other articulating features. See Figure 2.3.M.
   f. Blank wall surfaces greater than twenty (20) feet along the horizontal plane of the building are prohibited at the street level on any building façade adjacent to a sidewalk or public way, with the exception of façades facing the railroad right-of-way.
   g. Where blank wall surfaces are permitted, wall panels, pilasters, building bays, or other architectural elements shall be carried across the blank surface to relieve uninteresting façades. A waiver may be granted by the Commission to this requirement for façades that are within, or will be within, ten (10) feet of an adjacent building and therefore not visible from the public ways.
   h. Side and rear façades which are visible from the public ways shall be articulated in a manner compatible with the design of the front façade.

4. Materials and Colors
   a. New building materials shall be selected to convey a sense of quality, durability, and permanence, and shall be economically maintained and able to retain their appearance over time.
   b. Building façade materials permitted within the district include brick, wood, stone, cementitious fiber board, manufactured limestone, cast stone, masonry, terra cotta, cellular PVC trim, and sustainable materials. Brick is the preferred material in the Downtown Core and North Cherry Street Sub-Districts, and

should be chosen as the primary façade material; other materials may be used as discussed below.
Clapboards made of wood or cementitious fiber board are the preferred material in the Meadow Street Sub-District.

c. Full size brick veneer is preferable to brick tile veneer, and all brick veneers shall be mortared to give the appearance of structural brick. If used, brick tile veneer shall use wraparound corner and bull nose pieces to minimize the appearance of the thin brick veneer.
d. Stone and stone veneers are appropriate as a basic building material or as a secondary material for architectural elements such as window sills or lintels in combination with other materials such as brick or concrete.
e. Poured-in-place concrete or pre-cast concrete are appropriate as a basic building material provided special consideration is given to formwork, pigments, and aggregates to create a rich surface. If such material is used as a primary surface material, then brick, stone, or tile must be used as a secondary material to add visual interest.
f. A combination of materials is encouraged to create visual interest, especially on larger buildings. Where used, the heavier material (stone, brick, concrete) shall be located below lighter materials (wood, cementitious fiber board), and the change in material shall occur along a horizontal line, preferably at floor level.
g. Façade colors shall be low reflectance, subtle, neutral or earth-tone colors. The use of high intensity colors, metallic colors, black or fluorescent colors is prohibited.
h. Building trim and accent areas may feature brighter colors including primary colors, but neon tubing shall not be an acceptable feature for building trim or accent areas.
i. The use of vinyl siding, smooth faced concrete block, tilt-up concrete panels, or prefabricated steel panels as an exterior surface is prohibited.

5. Windows and Doorways
   a. Windows shall be inset a minimum of four (4) inches from the exterior wall surface to add visual relief to the wall.
   b. Windows shall be taller than they are wide, regardless of whether they are on the ground level or upper stories.
   c. Windows on the upper stories shall generally be smaller than those on the ground floor.
   d. All windows on upper stories shall have visually prominent sills, lintels, or other such forms of architectural framing.
   e. Recessed doorways are preferred, to break up the building façade, provide a welcoming space, and provide protection from the weather. Where a recessed doorway is not used, an awning or similar architectural overhang shall be used. Adequate lighting for the doorway shall be incorporated into the design of the doorway.

6. Roofs
   a. Roof forms shall complement the principal building in terms of style, detailing, and materials.
   b. Roof forms shall, where practicable, be varied within a block, and may be varied within a building, and shall include sloped roofs, parapets, decorative cornice treatments, decorative soffits, overhangs a minimum of three (3) feet, dormers, cupolas, or other architectural elements to complement the building without creating a cluttered visual appearance.

c. Flat roofs shall be screened from public view using parapets or other architectural elements. Outdoor living space may be constructed on roofs, provided the floor and lower three (3) feet of such space will not be visible from public view on abutting streets. Railings may be built into the exterior roof treatment (parapet, etc.) at other sides of the building.

d. Mechanical equipment, metal chimneys, and elevator shafts on a roof shall be screened from public view using parapets or other architectural elements.

e. In the Downtown Core Sub-District, four story buildings shall incorporate mansard roofs with dormers for the fourth story, or a strong cornice at the floor level of the fourth story, or for large buildings, a combination of the two in different sections of the building, to reduce the imposing appearance of the building.

f. Within the Meadow Street Sub-District, all roofs shall be sloped at a pitch of at least thirty (30) degrees.

g. In the North Cherry Street Sub-District, four story buildings shall incorporate mansard roofs with dormers for the fourth story, to reduce the imposing appearance of the building.

J. Signs

1. Only wall signs, hanging signs, or signs permanently painted on windows are permitted.

2. Lettering of signs shall be carved or incised into the surface of the wall or plaque, or, in the case of permanent window signs, painted on the interior surface of the glass.

3. One wall sign for each business is permitted on the front façade, as well as on the rear façade of a mixed use building. The aggregate size of all wall signs on a façade may not exceed one (1) square foot per lineal foot of the building façade. When a building is located on a corner, both the front and side façades shall be considered front façades provided there are business entrances located at the street level on the side of the building. When a building has a side which is visible from the street, one wall sign is permitted which identifies the building but not the individual businesses located within the building, and such sign shall not exceed one (1) square foot per lineal foot of the building side.

4. Wall signs shall not project more than twelve (12) inches from the surface of the wall to which they are attached, and shall be located a minimum of eighteen (18) inches from the corner of the building, a minimum of thirty-six (36) inches from any other wall sign, and the top of the sign shall not extend above the ground level floor.

5. One (1) hanging sign is permitted for each business on the ground level. Such hanging sign shall be a maximum of six (6) square feet in area (per face), shall project no more than three (3) feet from the building, and must provide a minimum of eight (8) feet and maximum of twelve (12) feet of clearance from the bottom of the sign to the sidewalk directly below. Such hanging signs shall not be located so as to interfere with any service or emergency vehicles.

6. Signs shall be illuminated by an external steady stationary light source, shielded and directed solely at the sign. Internally lit signs and any sign with blinking, flashing, or fluttering lights or other illuminating devices which have a changing light intensity,

brightness, or color, are prohibited, including electronic message centers.

7. The provisions of § 6.9 B, regarding signs not requiring a permit, shall apply within this overlay district.

K. Streetscapes

1. Where a proposed Incentive Housing Development abuts a street that lacks a sidewalk, or where existing sidewalks are not in compliance with applicable standards, the application shall include a proposal to construct or improve the sidewalks abutting the project site. New or improved sidewalks shall be a minimum width of 5 ft. in addition to the paver strip required for the streetscape enhancements under this section. The applicant for any Incentive Housing Development shall, to the extent the costs are not so excessive as to render the entire project financially infeasible, be responsible for construction of "Town Standard Streetscape Enhancements" as depicted in Figure 2.3.N. The Commission may include a condition on the site plan approval specifying which, if any, of these enhancements will be required.

2. Streetscape enhancements may include new concrete curbs, concrete sidewalks, driveways constructed to Town standards, brick paver bands, concrete handicap pedestrian ramps with detectable warning strips, grass utility strips, ornamental street lights, street trees, benches, trash receptacles, and/or associated landscaping.

3. These enhancements shall be constructed in general conformance with the Town's standards for like work and be approved by the Town Engineer or his designee.

4. Within the Downtown Core Sub-District, landscape features that enhance the pedestrian environment shall be included where practicable, such as plazas, sitting areas, and outdoor seating for cafés.

L. Landscaping

1. All areas between the front of a building and the front property line that are not occupied by driveways, sidewalks, or other approved hardscape, shall be landscaped with grass or other living ground cover, trees and shrubs. Landscape stone shall not be permitted in front yards with the exception of small areas within planting beds and as accent pieces within a vegetated landscape.

2. All plantings shall be native species. Invasive species, native or non-native, are prohibited. Plantings near streets, parking areas, or sidewalks shall be salt tolerant.

3. Street trees, if used, shall be planted in conformance with the Town's standards, as depicted in Figure 2.3.O.

4. Landscaping improvements may include amenities such as street furniture, artwork, fences, stone walls, fountains, and courtyards.

5. Preservation of existing trees is strongly recommended.

M. Site Lighting

1. All outdoor lighting fixtures shall have a total cutoff of all light at ninety (90) degrees or less from vertical with the exception of wall mounted fixtures at doorways, which shall be shielded from emitting light upwards beyond an entry overhang or awning.

2. Lighting fixtures along sidewalks or pathways shall not exceed twelve (12) feet in height, although the supporting poles may exceed that height.

3. Poles supporting light fixtures shall be dark in color to reduce light reflectivity.

4. All light fixtures shall emit a steady, constant light and shall not emit a flashing or irregular light, unless specifically required by Federal, State, or municipal authorities.

5. All outdoor light fixtures using metal halide lamps shall be shielded and filtered, and quartz glass does not meet this filtering requirement.

6. The following types of light sources are prohibited: mercury vapor, low pressure sodium, or quartz lamps, laser, searchlights, cobra-head fixtures, or moving or colored lights with the exception of temporary holiday displays.

7. All outdoor lights shall be designed, located, and installed in such a manner as to prevent objectionable light, including disability glare, from creating a nuisance on abutting properties or the public way.

8. Light levels shall comply with the luminance recommendations of the Illuminating Engineering Society of North America (IESNA).

9. Lighting for the American flag may deviate from these standards but shall not produce disability glare nor create a nuisance for abutting properties or residents of the area.

§4.24 RENTAL HOUSING OPPORTUNITY DISTRICT (RHOD) *11/16/14*

A. Purpose: To promote development of affordable rental housing and to establish standards for the development of such housing that will be binding on the applicant, its successors, and its assigns.

B. The following uses are permitted subject to approval of a site plan in accordance with Sections 7.1 to 7.4 of these regulations.

1. Multi-family residential rental dwelling units in new or existing buildings in accordance with Connecticut General Statute 8-30g.

C. Applications for an RHOD shall be in writing and shall be accompanied by the following:

1. Existing Site Conditions Map showing existing contours at a maximum interval of 5 feet, wetlands and watercourses, existing buildings and other structures, and large trees.

2. Site Plan prepared in compliance with Sections 7.1 through 7.4, including showing proposed buildings and structures; streets, driveways and off-street parking; schematic landscaping plan; utilities; site grading plan; and location map showing relationship of proposed development in relationship to existing streets.

3. Architectural Plans.

4. If an RHOD application is based initially on a conceptual site plan, development of a parcel rezoned to RHOD shall, in addition to conformance to RHOD standards, be built in substantial conformity with the road layout and architectural design presented on such conceptual plan.

D. Development Standards: The following standards and requirements shall apply to any development in the RHOD:

1. The minimum parcel size for a RHOD shall be 2.5 acres and the *7/17/20* maximum parcel size for a RHOD shall be 4.0 acres. Such parcel shall have at least 100 feet of frontage on Woodhouse Avenue.

2. The maximum density for rental apartment units shall be 15 units per gross acre, minus 100 percent of wetlands, watercourses, slopes over 25 percent, floodplains or floodways, and utility easements. No more than 1 existing single-family dwelling may remain on the property and be considered a unit.

3. The maximum coverage by all buildings as a percentage of the lot area shall be no more than 20% of the gross area of the site.

4. The parcel shall be serviced by sanitary sewers and public water supply.

5. Buffer – Within required setbacks from the parcel's boundaries, a landscaped buffer area or privacy fencing shall be provided wherever necessary:

a. to protect property values by preserving existing vegetation or planting new materials;

b. to provide privacy from visual intrusion, light, dirt, and noise; and

c. to improve the appearance of development within the Town.

Additional buffering may be required by the Commission to meet the purposes of this section. Existing development on abutting property shall not be deemed as automatically requiring additional buffering.

6. Minimum setbacks:

a. Front Yard: 40 feet;

b. Side Yard: 30 feet, provided that setbacks may be reduced to 12 feet for a side of a residential building where adjacent to open space; and

c. Rear Yard: 30 feet provided setbacks may be reduced to 20 feet for a rear of a residential building where adjacent to open space or another multi-family community. *7/17/20*

7. Maximum building height – 30 feet, provided that if a proposed multi-family building is set back more than 85 feet from the public street frontage, height may be increased to 38 feet.

8. Architectural Design – The architectural design, scale, and mass of building and other structures, including, among other elements, the exterior building material, color, roof-line, and building elevation shall be residential in character and feature traditional New England designs so as to harmonize and be compatible with the neighborhood, to protect property values in the neighborhood, and to preserve and improve the appearance and beauty of the community.

9. Utilities – All utilities within the site shall be underground.

10. Parking – Parking shall be offered in conformity with the requirements of §6.11, however in cases where the parking is adjacent to a property line which is more than 100 feet from the streetline, parking may be located six (6) feet from the property line provided if the parking area is screened by a privacy fence and landscaping. No resident or tenant in an RHOD development shall park overnight on the property a commercial truck or trailer.

11. Exterior Lighting – Exterior driveway and parking lighting shall be provided and maintained by the property owner for the safety of vehicular and pedestrian traffic. All exterior lighting shall be full cut-off type fixtures, with pole heights at the minimum necessary for pedestrian safety and convenience, and the site plan will, wherever safe and feasible, minimize light intrusion onto adjacent properties.

12. Refuse Areas – A refuse collection area shall be provided and conveniently located to all dwelling units. Designated collection area shall be screened, and appropriately landscaped.

13. Storm Drainage – All storm drainage facilities shall be designed and constructed in accordance with the Town standards and State requirements.

14. Fire Hydrants – Fire hydrants shall be installed and located as required by the Wallingford Fire Department.

15. Traffic Access – All driveways, drive aisles, parking areas, and driveway aprons shall be constructed in accordance with Town standards specified in the Zoning Regulations.

16. Open Space / Passive Recreation – Each RHOD site plan shall provide for an area, not less than 1,500 square feet, which shall be lawn and/or landscaping suitable for passive recreation such as a sitting / picnic area with benches. Such open space area shall not be used for storage of any kind.

17. Signage – Signs shall comply with §6.9.D.2 of these regulations.

E. The following requirements shall apply to a RHOD:

1. Additions or modifications after approval will be governed by §4.19.E.19 of these regulations.

2. RHOD dwelling units shall be of a construction quality that is comparable to market-rate dwelling units within the development. The final site plan and plan for administration of affordability rules shall identify the locations within the RHOD development of the RHOD dwelling units.

3. The RHOD dwelling units shall be leased on a *pro rata* basis as leasing proceeds.

4. Calculation of the maximum monthly payment for a RHOD dwelling unit, so as to satisfy Connecticut General Statutes §8-30g, shall utilize the area median income data as published by the U. S. Department of Housing and Urban Development in effect on the day a lease is executed by the parties.

5. The maximum monthly rental payment that the occupant of a RHOD dwelling unit shall pay shall not be greater than the amount that will preserve such unit as "affordable housing" as that term is defined in Connecticut General Statutes § 8-30g, and shall include the monthly rent; any mandatory additional charges in the lease; heat; and utility costs for hot water and electricity, but excluding telephone and cable television.

6. At the same time that the market-rate dwelling units in a RHOD development are first advertised to the general public, notice of availability of the RHOD dwelling units shall be provided by advertising such availability in the real estate section of a newspaper of general circulation in the Town of Wallingford, by providing notice to the Wallingford Town Council, the Wallingford Town Clerk, and the Wallingford Planning and Zoning Commission, and through the procedures outlined in the Affirmative Fair Housing Marketing Plan.

7. For 1 of every 3 RHOD dwelling units which becomes available for initial rental, preference shall be given to applicants who are otherwise qualified and are residents of the Town of Wallingford, a child or parent of Wallingford residents, or those who meet the criteria of "least likely to apply," as defined in Connecticut Regulations of State Agencies §8-37ee.

8. The 50 year affordability period shall commence with the initial occupancy date of the first RHOD unit to be occupied, as stated in the lease.

9. In conjunction with an application for approval of a final site plan for a RHOD development, the applicant shall submit an "Affordability Plan," which shall describe how the regulations regarding affordability will be administered. The Plan shall include provisions for administration of and compliance with the provision of this section, notice procedures to the general public of the availability of affordable dwelling units, identification of those dwelling units which are to be designated affordable, procedures for verification and periodic confirmation of unit occupancy income, and compliance with affordability requirements. Such Plan shall also include drafts of documents that will be used in the administration of the affordability restrictions and any explanations which will be provided to the prospective occupants concerning such restrictions.

10. The applicant shall also submit an Affirmative Fair Housing Marketing Plan to govern the rental of all RHOD dwelling units at the time of final site plan approval.

11. A violation of the regulations contained in this section shall not result in a forfeiture or reversion of title by the property owner, but the Wallingford Planning and Zoning Commission or its designated agent shall otherwise retain all enforcement powers granted by the Connecticut General Statutes, including the authority under §8-12 to issue notices of violation, to impose fines, and to seek injunctive relief.

§4.25 HOUSING OPPORTUNITY DISTRICT – GENERAL *1/13/17*

A. Purpose: To promote development of affordable housing in the Town within private sector multi-family residential developments and to establish standards for the development of such housing that will be binding on the applicant, its successors, and its assigns, so as to increase the diversity of Wallingford's housing stock pursuant to C.G.S.§8-30(g).

B. The following uses are permitted subject to approval of a Site Plan in accordance with Section 7.1 to 7.4 of these Regulations.

1. Multi-family residential dwelling units in new or existing buildings, in which a minimum of 30% of the dwelling units are designated "affordable housing" units for a minimum of 50 ears, in accordance with the definition in §2.2 of these Regulations.
2. Where the zone of the development area was commercial or mixed-use zones, retail use on the first floor when there is a development in accordance with §4.24.B.1 (above) on the upper story/stories.

C. HOD-G Procedure

1. An HOD-G development shall require approval of a Zoning Map Amendment pursuant to Article X of these Regulations that designates the proposed area of the HOD-G Zone, and Site Plan approval for the specific proposed development pursuant to §VII of these Regulations.
2. An HOD-G shall be created on a parcel/parcels of land only after a public hearing for a Zoning Map Amendment pursuant to Article X of these Regulations. In approving a HOD-G, the Planning and Zoning Commission shall make a finding that the proposed development does add to the diversity of housing stock in the Town and that the standards, criteria and conditions for an HOD-G below have been met.
3. An HOD-G shall only be created in any R-6, R-11, CLB, YLB, DD or RF zone.
4. Submission Requirements: Applications for an HOD-G zoning designation may be submitted prior to, or simultaneous with, the required Site Plan application for the specific development.
   a. Applications for an HOD-G zoning designation shall be in writing and shall be accompanied by the following:
      I. Existing Site Conditions Map showing existing contours at a maximum interval of 2 feet, property lines, wetlands and watercourses, floodplain areas, existing buildings, and other structures, and large trees, and the proposed boundaries of the HOD-G zone.
      II. Conceptual Site Plan describing the proposed development's total number of residential units and their arrangement on the property; the proposed development's roads, traffic circulation, and off-street parking area(s); sewage disposal and water supply; buildable area and density calculations; zoning table with basic lot and bulk requirements/proposal, and any other information as may be required by the Commission.
   b. Applications for the required Site Plan approval shall include the following:
      I. Full Site Plan prepared in compliance with Section 7.1 through 7.4, including showing proposed buildings and structures; streets, driveways and off-street parking; landscaping plan; utilities; site grading plan; zoning table with lot and bulk requirements; location map showing relationship of proposed development in relationship to existing streets; all other

applicable requirements therein; and any other information as may be deemed necessary by the Commission.

II. Architectural Plans, including building elevations and floor plans.

III. Affordability Plan – In conjunction with an application for approval of a final Site Plan for an HOD-G development, the applicant shall submit an "Affordability Plan" which shall describe how the regulations regarding affordability will be administered and shall certify that the plan complies, and shall remain in compliance, with applicable State requirements and definitions for affordable housing. Specifically, the affordability plan shall include all applicable requirements in Part E of this Section, as well as at least the following: **(A)** Designation of the personal, entity or agency that will be responsible for the duration of any affordability restriction, for the administration of the affordability plan and its compliance with, of this section and CGS §8-30(k)(3) including income limits and sale price or rental restriction; **(B)**(draft deeds/restrictive covenants and (for rental units) lease provisions that will govern the affordable dwelling units, and any other applicable administration/compliance documents, including any explanations which will be provided to the prospective buyer/renter of affordable unit; **(C)**procedures for verification and periodic confirmation of unit occupancy income; **(D)**a sample calculation of the maximum sales prices or rents of the intended affordable dwelling units; **(E)**a description of the projected sequence in which the affordable dwelling units will be built and offered for occupancy; **(F)**identification of the units which are to be designated affordable (with provisions for changes based on availability when applied to rented apartment units); **(G)**an Affirmative Fair Housing Marketing Plan governing the sale or rental of all dwelling units and including notice procedures to the general public or the availability of affordable dwelling units.

D. Development Standards: The following standards and requirements shall apply to any development in the HOD-G:

1. An HOD-G shall be located on a parcel which has frontage on and direct access to any public street classified as a collector, feeder, or thoroughfare as defined by §5.2.F.
2. Lot/Bulk Requirements:
   a. Minimum parcel size: two (2) times the required minimum lot area of the underlying zone as defined by §5.1A, or three (3) acres, whichever is greater.
   b. Minimum frontage: same as underlying zone in which the HOD-G is proposed.
   c. Minimum setbacks for an HOD-G shall be two (2) times those required for the underlying zoning district in which the HOD-G is proposed.
   d. Maximum building height – 30 feet, except that for every one (1) additional foot of building setback from the front setback line, the building height may be increased by one (1) foot up to a maximum building height of 40 feet.
   e. Maximum coverage (all buildings): 25% of the buildable area of the site.
   f. The maximum density of an HOD-G shall be twelve (12) units per buildable acre.
   g. For the purposes of this section, buildable area shall be the total area of the parcel less: 100 percent of wetlands, watercourses, slopes

over 25 percent, floodways, floodplain, and utility easements; and buildable acreage shall be the total acreage of this buildable area.

3. Open Space/Recreation Area – Where possible, the building(s) and parking layout shall be situated such that the open space area is contiguous and has a meaningful shape, character and location to provide useable active or passive recreation. Such areas shall be as centrally located as possible.
4. Buffer – Within required setbacks from the parcel's boundaries, a landscaped buffer area and/or privacy fencing shall be provided pursuant to the following considerations and requirements:
   a. To preserve existing vegetation or planting new materials;
   b. To provide privacy from visual intrusion, light, dirt, and noise; and
   c. In cases where topography, natural features, existing vegetation or compatible land uses do not make a larger buffer necessary, the minimum planted buffer shall be 50% of the required building setback for the underlying zone in which the HOD-G is proposed. Additional buffering may be required by the Commission to meet the purposes of this section. Existing development on abutting property shall not be deemed as automatically requiring additional buffering.
   d. Where lot size and shape or existing structures make it infeasible to comply with the buffering requirements, the Commission may approve planters, plant boxes, pots containing trees, shrubs, and/or flowers, or fencing to comply with the intent of these regulations.

5. Architectural Design – The architectural design, scale, and mass of building and other structures, including, among other elements, the exterior building material, color, roof-line, and building elevation shall be residential in character and feature traditional New England designs so as to harmonize and be compatible with the community, to protect property values in the neighborhood, and to preserve and improve the appearance and beauty of the community.

6. Utilities –
   a. All utilities within the site shall be underground.
   b. The parcel shall be serviced by sanitary sewers and public water supply.

7. Parking – All parking areas, including but not limited to parking spaces, driveways, drive aisles, and landscaping requirements, shall be provided in conformity with the requirements of §6.11 except as provided in §4.25.F.4 of these Regulations. No resident or tenant in an HOD-G development shall park a commercial truck or trailer overnight on the property.

8. Sidewalks – Sidewalks shall be constructed in accordance with Town standards.

9. Landscaping – In addition to the required landscaped buffer, foundation plantings and landscaped parking areas per §6.14.E of these Regulations shall be required.

10. Except as exempted in §4.25.F below, a school bus shelter shall be required at the main entrance of all HOD-G developments.

11. Exterior Lighting – Exterior driveway and parking lighting shall be provided and maintained by the property owner for the safety of vehicular and pedestrian traffic. All exterior lighting shall be full cut-off type fixtures, with pole heights at the minimum necessary for pedestrian safety and convenience and not higher than 15 ft. The glare

from light sources shall be shielded from roads and abutting properties.

12. Refuse Areas – A refuse collection area shall be provided in an enclosed area and conveniently and centrally located to all dwelling units. The designated collection area shall be screened and appropriately landscaped.

13. Storm Drainage – All storm drainage facilities shall be designed and constructed in accordance with the Town standards and State requirements, subject to approval by the Town Engineer.

14. Fire Hydrants – Fire hydrants shall be installed and located as required by the Wallingford Fire Department.

15. Traffic Access – All driveways, drive aisles, parking areas, and driveway aprons shall be constructed in accordance with Town standards specified in the Zoning Regulations.
16. Signage – Signs shall comply with §6.9.D.2 of these Regulations.
17. If the zoning for a property has been changed to HOD-G based on a conceptual Site Plan, development of such parcel shall, in addition to conformance to HOD-G standards, be built in substantial conformity with the road layout and architectural design presented on such conceptual plan.

E. The following requirements shall apply to an HOD-G:
1. Additions or modifications after approval will require approval of a Site Plan subject to the requirements of Article 7, as applicable, of these Regulations. The Commission considers each HOD-G development based on the specific representations made in the application, and is concerned over both the architectural design of the building(s) and consistency between units. As such, the following policies shall apply:
   a. Accessory apartments are not permitted.
   b. Any changes to the site, including, but not limited to: additions to individual units, including rooms, sun porches and garages; deck enlargements; and decorative fencing; are not permitted unless approved as a Site Plan modification that generally considers consistency for all of the units in the development rather than on a unit-by-unit basis.
   c. Accessory buildings, swimming pools, and playscapes are not permitted for the exclusive use of the individual units; but may be approved for community use for the development as part of a Site Plan modification.

2. HOD-G dwelling units shall be of a construction quality and size that is comparable to market-rate dwelling units within the development. The final site plan and plan for administration of affordability rules shall identify the locations within the HOD-G development of the HOD-G dwelling units.

3. In the cases of dwelling units that shall be individually owned, the HOD-G units shall be offered for sale on a *pro rata* bases as sales proceed. For example, if 30% of the units are affordable, then for every 2 units sold, the 3rd must be an affordable unit.

4. Calculation of the maximum eligible income and the maximum monthly payment or the maximum purchase price for an HOD-G dwelling unit, so as to satisfy Connecticut General Statutes §8-30g, shall utilize the area median income data as published by the U.S. Department of Housing and Urban Development in effect on the day a lease or sale is executed by the parties.

5. The maximum purchase price or monthly rental payment that the eligible purchaser/occupant(s) of an HOD-G dwelling unit shall pay shall not be greater than 30% of their income in accordance with CGS8-30g(k). In the case of rental units, such monthly rental payment shall include the cost of monthly rent, any common charges, repair/maintenance of the unit/grounds according to the lease, heat and utility costs for hot water and electricity but excluding telecommunications, television, and information technology services. In the case of ownership housing, the maximum purchase price shall include mortgage payments, real property taxes, homeowners insurance, common charges in the case of a common interest community; and heat and utility costs for hot water and electricity but excluding telecommunications, television, and information technology services.

6. Each deed or lease for an HOD-G dwelling unit will contain substantially the following provision:

   "This unit is rented as an affordable dwelling unit and is available only to persons or families whose income is at or below 80% or 60% as applicable, of the area median income for Wallingford or the statewide median income, whichever is less, as determined by the U.S. Department of Housing and Urban Development has been approved by agencies of the Town of Wallingford based in part on the conditions that a defined percentage of homes will be preserved as affordable housing homes. The restrictions related to affordability are required by law to be strictly enforced in accordance with the approved Affordability Plan and reporting requirements." The Affordability Plan shall be filed with the Planning and Zoning Department and the Town Clerk's office prior to the sale/rental of any units.

7. At the same time that the market-rate dwelling units in an HOD-G development are first advertised to the general public, notice of availability of the HOD-G dwelling units shall be provided by advertising such avail ability in the real estate section of a newspaper of general circulation in the Town of Wallingford, by providing notice to the Wallingford Planning and Zoning Commission, and through the procedures outlined in the Affirmative Fair Housing Marketing Plan.

8. For 1 of every 3 HOD-G dwelling units which becomes available for initial rental, preference shall be given to applicants who are otherwise qualified and are residents or employees in the Town of Wallingford, a child or parent of Wallingford residents, military veterans, or those who meet the criteria of "least likely to apply," as defined in Connecticut Regulations of State Agencies §8-37ee.

9. The 50 year affordability period shall commence as follows: for an HOD-G development containing rental units, with the initial occupancy date of the first HOD-G unit to be occupied, as stated in the lease; for independently owned HOD-G units, upon the initial execution of purchase of that unit.

   In the case of rental housing under this section, any unit in the development shall not be sub-leased under any circumstances. In the case of ownership housing under this section, any unit in the development must be owner-occupied and may not be rented under any circumstances. The HOD-G unit shall be occupied only as the principal residence of: the lease, in the case of apartment units; or the owner, in the case of individually owned units.

F. Age-Restricted Housing as an HOD-G Development

1. “Age-Restricted Development” shall be housing in accordance with this Section, in which all occupants shall be limited to parsons 62 years of age or over, by deed restriction, covenant, rental contract, and/or other legal means as deemed appropriate.
2. The maximum density for an Age-Restricted Development shall be 16 units per buildable acre.
3. No more than 2 bedrooms per unit are permitted in an Age-Restricted Development.
4. The minimum number of parking spaces required in an Age-Restricted Development shall be as follows:
   a. 1.5 spaces per dwelling unit.
   b. The number of handicap-accessible parking spaces shall be 1 for every 15 spaces or as required under Federal Americans with Disabilities Act, whichever is greater.
5. In an Age-Restricted Development, a school bus shelter shall not be required; however, when an Age-Restricted Development is to be located on roads designated as thoroughfares, either a standard bus shelter and/or a drop-off/pick-up area shall be provided.
6. An Age-Restricted Development shall make provisions for aging in place, to be demonstrated at the time of Site Plan application and approved by the Commission.

4.26 TOWN CENTER (TC) DISTRICT ***8/17/18***

A. Purpose –To encourage the development and redevelopment of the entire Town Center area as a vibrant pedestrian-friendly commercial destination, with strong supportive institutional and residential components, while building off of and promoting a "Town Center" character.

B. The following uses are permitted subject to either: 1) a Zoning Permit, where only a change in use is requested and no changes to the site are required/proposed; or 2) Site Plan approval in accordance with Article VII, where changes to the site are required/proposed:

1. Stores and shops where goods are sold and services are rendered primarily at retail, except that pawn shopsand shops devoted primarily to sale of tobacco, "vaping" paraphernalia, or other smoking devices shall be prohibited.
2. Restaurants and other food service facilities with or without a liquor permit.
3. Laundromats, clothes cleaning services.
4. Banks and financial institutions.
5. Real estate sales agencies and travel agencies.
6. General/Business offices, provided they are not located on the ground level street-facing side of any building
7. Medical/Dental offices, clinics, and outpatient medical treatment facilities, provided they are not located on the ground level street-facing side of any building.
8. Indoor recreation, including but not limited to: health/sports clubs, yoga studios, billiard and pool parlors, and other indoor places of public recreation operated as a business; instruction of indoor recreational activities; instruction in the arts (music, painting, graphic design, photography, etc.)
9. Museums; art galleries.
10. Bars, pubs, cafes, taverns; brewpubs; microbreweries with a tasting room and/or retail area, when the production area does not occupy more than 50% of the GFA of the total use.
11. Government facilities, buildings, and uses; public utility buildings, facilities, and uses.
12. Veterinary hospitals for small animals, pet grooming, day care, and/or training facilities, provided the animals are not boarded over night.
13. Service establishments (repair, rental and/or service of any item that is allowed to be sold in the zone).
14. Funeral homes.
15. Residential uses as follows:
    a. Maximum densities shall be:
       26units per acre in lots under 25,000 sq. ft.
       30 units per acre on lots equal to or over 25,000 sq. ft.
    b. Shall not be located on any first floor, except:
       Only the number of units required to provide mobility features in accordance with Connecticut State Building Code and the U.S. Department of Housing and Urban Development, provided these units do, in fact, provide mobility features, may be located on the ground floor, and no units shall be located in the ground level street-facing area of the building.
    c. Shall not be permitted in any basement without approval of a Special Permit, as noted below.
16. Town-sponsored outdoor events, farmers'/garden markets, entertainment, etc.

17. Wellness Center – An establishment that offers services for the body and mind and includes at least two of the following: skin care services, fitness services, personal training, nutritional services, retail sales of wellness products, and state licensed/certified chiropractic or acupuncture services.

    Chiropractic services, as part of a wellness center, may be on the ground floor, street facing side of the building, provided at least one additional wellness service is also available on the ground floor.
    11/13/20

C. The following uses require approval of a Special Permit in accordance with §7.5:
   1. Bowling alleys.
   2. Movie theaters
   3. Clubs, lodges, fraternal organizations, places of worship.
   4. Business and/or trade schools.
   5. Hotels/motels with not less than 6 units.
   6. Banquet facilities and conference facilities
   7. Schools, colleges, universities.
   8. Child day care centers, nursery schools.
   9. Residential dwelling units as permitted in Section 4.26.B.15 above and included in total permitted density calculation, that are located in a walk-out basement.
   9. Group day care facilities.
   10. Uses permitted in Section B above and generating more than 100 peak hour vehicle trips.
   11. Parking garages in accordance with the requirements of this section and that are used for parking of vehicles by patrons/residents of the lots on which they are located or other businesses/residences in the vicinity; private long-term storage of vehicles that are not in regular use shall not be permitted.

D. The following Accessory Uses are permitted:
   1. Signs in accordance with Section 6.9. of these regulations.
   2. Production of goods sold on the same premises, not to occupy more square footage than the area of the business used for sales.
   3. Limited activities associated with special events/sales at a permitted business, in addition to Town-sponsored events, including:
      a. Outside sale/display of merchandise up to 1 day in each calendar month, provided the sale/display is located on private property, and does not block any required vehicular or pedestrian access ways, or any required parking.
      b. Special events that are clearly accessory to and an extension of the permitted primary use on the site, such as:
         - Mobile food vendors OR the serving of catered food/beverages indoors
         - Mobile food vendors or the serving of catered food or beverages outdoors on private property and in association with a permitted primary user on the site, for no more than 35 days in any calendar year and provided that any required parking spaces are not occupied
         - Temporary tents, booths, etc., provided they shall not occupy any required parking spaces.
         - Fairs, farmers markets

4. Temporary construction offices, limited to the time period during which there is an active building permit for the site and work is in progress.
5. Off-street parking and loading in accordance with §6.11, except as noted in Sections E and F below.

E. **Building Form/Site Layout Standards -** The following lot, dimensional, intensity, building form, and site layout requirements shall apply in the TC zone:

1. Lot/Bulk Requirements

Minimum Lot Size	25,000 sq. ft.	
Minimum Lot Frontage	50 ft.	
Minimum Front Yard	0 ft.	
Maximum Front Yard	5 ft. (1st& 2nd stories) N/A (3rd& 4th stories)	May be increased to up to 20 ft. for 1st and/or 2nd floor to allow for an outdoor dining area or other amenity (i.e. gathering space, green space/garden, fountain, etc.) that, as determined by the Commission, is designed and proposed in such a way as to provide a public benefit compared to the standard required building setback
Minimum Rear Yard	0 ft.;	
When rear property line is adjacent to R or CLB zoning district:	15 ft. for 1st 2 stories and 25 ft. for 3rd story and up	
Minimum Side Yard	O ft.; 8 ft. for residential uses when the only windows for the unit are located on the side of the building	
When side property line is adjacent to R or CLB Zoning District	12 ft.;	
Minimum Building Frontage	Building of at least 15 ft. in height must occupy at least 75% of total lot frontage	May be reduced by the Commission to allow for the vacant frontage necessary to install a driveway, as determined by the Commission
Building Height	35 ft.	May be increased to no more than 4 stories and no more than 45 ft., subject to approval of a Special Permit by the Commission. In considering such Special Permit, the Commission shall be satisfied that the additional building height is sufficiently mitigated by appropriate roof design and other building form components, as described in the building form requirements of this section

2. Building Form/Site Layout

All new construction, including building additions, shall be required to comply with the following building form and site layout standards.

When existing building(s) or portion(s) thereof are to remain and are subject to Site Plan approval only, any existing building form is

entitled to remain; however, renovations or improvements are encouraged to bring the existing building into compliance with these standards to the extent practical.

When any proposed use, development, or parking component(s) of a site requires a Special Permit, the entire site and any existing and remaining building(s) or portion thereof become part of the Special Permit and shall be brought entirely into compliance with these standards, except that the Commission may determine that certain existing non-conformities that can not practicably be brought into compliance may be allowed to be reduced or to fully remain rather than being brought into full compliance.

a. Within each floor of building frontage, and each floor of any other wall or portion of a wall that is visible from a public way, there shall be at a minimum, one or more interruptions of the façade and/or plane (projection/recess of a depth of at least 1 ft., window, balcony, trellis, or similar architectural feature) at least every 20 ft. Such interruptions shall occupy, in total, at least 20% of the total building frontage.
b. Blank wall surfaces greater than 20 ft. in width within the entire square building frontage between 2 and 10 ft. above grade, are prohibited.
c. For any portion of a building that is not visible from the public way but is visible from public parking or parking that is made available to the general public under this section and islocated on the same lot as the building, there shall not be any blank portions of the wall for more than 40ft. in width measured on each level.
d. Multi-story buildings shall incorporate a distinction between the ground level floor and the upper stories by separating with cornices, banding, smaller windows on upper stories, balconies, step-backs, plane interruptions or other articulating features.

e. Multi-story buildings shall articulate their base, middle, and top by separating with cornices, strong cornices, banding, step-backs, or other articulating features.
f. Placement of windows and other architectural features shall be arranged with a balanced spacing and evident rhythm. Windows shall align vertically with those of stories above and/or below.
g. All roofs shall incorporate at least one of the following, or a combination thereof: mansard roofs with dormers,strong/decorative cornice at the floor level of the top story, variations in roof forms and/or parapet heights at least every 20 ft.,cupolas, decorative soffits, or a 5 to 10 ft. step-back of at least the 4th floor (where applicable) measured from the front wall of the floor below the floor being stepped back.
h. For buildings that are over 30 ft. in height, the top story of a building shall incorporate at least one of the following, or a combination thereof: mansard roofs with dormers, strong/decorative cornice at the floor level of the top story, or a 5 to 10 ft. step-back of at least the 4th floor (where applicable) measured from the front wall of the floor below the floor being stepped back.
i. Flat roofs shall be screened from public view using parapets or other treatments, which shall count as part of the maximum building height.

j. Building Fenestration – The percentage of the area of street-level building frontage between 2 ft. and 10 ft. above grade that consists of windows and public entrance/exit doors shall be at least 50%. The portion of the building between grade and 2 ft. above grade shall not include windows. The percentage of the area of street-level building frontage above 10 ft. that consists of windows shall be at least 15% and shall not exceed 70%.
k. Separate and distinct entrances shall be required for first floor and upper story uses. The entrance to the second floor use may occupy a portion of the building frontage, but shall not exceed 10% of the length of the building frontage or 5 ft., whichever is greater.
l. Entrances for uses that are on the ground floor but are not located within the street-facing area of the building shall be limited to one (1) within any 50 ft. of building frontage, and shall not exceed 10% of the length of the building frontage or 5 ft., whichever is greater.
m. There shall be an entrance to at least some portion of the building provided within at least every 100 ft. of building frontage.
n. Maximum number of alleyways/walkways per lot from the rear of the lot to the front of the building shall be limited to one (1). This walkway/alleyway must have ample lighting and comply with applicable public sidewalk standards, including an unobstructed width of at least 5 ft. Any way finding signage shall be compliant with §6.9 of these Regulations.
o. The entire front yard of a property, except for the area required for an existing/approved driveway and/or sidewalks, shall be composed of landscaping, public green/gathering space or other amenity as approved by the Commissions, and/or outdoor dining.
p. Solid waste/recycling receptacles shall be grouped in one designated area on each property, shall not be located in a front yard, and shall be screened from view from other properties and public rights-of-way by an enclosure and/or landscaping.
q. Mechanical equipment, HVAC equipment, metal chimneys, and elevator shafts on a roof shall be placed or screened, so as not to be visible from the public way or the grade level of any adjacent properties.
r. Drive-through services shall not be permitted.

3. Parking Design
a. Existing Parking Layout – In situations in which the layout, shape, size, and/or configuration of the existing lot and the existing/remaining building area is such that all parking design requirements cannot be complied with, or, if complied with, would significantly reduce the number of parking spaces as currently designed/utilized/configured, the Commission may determine, by Special Permit, that certain existing non-compliant elements of the parking lot (such as, but not limited to: aisle widths, existing compact car spaces, landscaping, etc.) may be allowed to continue. The Commission may require demonstration by the applicant’s design professional as to the impact of full compliance with current regulations on the number of parking spaces which could be provided, and certification from an appropriate professional (i.e. engineer) that the continuance of the existing non-conformities proposed to remain will not create a public safety hazard. In considering such Special Permit, the Commission may consider applicable elements such as: property

limitations and existing building locations that limit the physical ability to comply with the applicable requirements; existing parking conditions and whether they have created any significant safety/circulations issues to date; the number of spaces that would be lost by bringing all parking up to current standards; provision of appropriate connection to adjacent parking area; safety associated with the proposed remaining non-conformities, particularly as represented by a parking professional; and other elements which the Commission deems appropriate.

b. Access Management - In order to limit congestion, site line issues, traffic accidents, and other circulation issues attributable to poorly designed access systems; in order to better allow for more safe pedestrian and vehicular circulation, and to further the orderly layout and use of land, access management will be required for any proposal involving new construction or re-construction or any site modifications that require a Special Permit associated with parking requirements. Access Management requirements shall be as follows:

i. Where feasible, new access driveways shall be aligned with existing driveways located on the opposite site of the road.

ii. Wherever possible, a drive or system of drive aisles extending the entire block and located behind the buildings shall be used to provide access to parking and loading. Such driveways shall be compliant with the requirements of these zoning regulations, except that, where it is demonstrated that the required 24 ft. width is not possible or would significantly limit the circulation and design of access and parking areas, the Commission may reduce the drive width to 22 ft., based on review and approval by the Town Engineer.

iii. The maximum number of curb cuts per lot shall be 1, except that properties that are located internally to a block (i.e. do not front on more than 1 street) and have easements granted to them to allow vehicular access across adjacent property, no curb cuts shall be allowed. This restriction may be modified by the Commission if it can be demonstrated that an additional curb cut is necessary for reasons of public safety and/or to improve circulation.

iv. In designing development, redevelopment, or site modifications, properties shall provide vehicular cross access to and from adjacent properties in order to create/perpetuate the single drive or system of drive aisles to the rear of the block. An easement shall be recorded on the Town Land Records allowing such cross-access and including a shared maintenance agreement, and stub-outs and other design features shall be provided to provide for tie-in by abutting properties.

v. Upon application for development, redevelopment, or site modifications, other curb cuts not consistent with this section shall be eliminated wherever possible.

vi. The Commission may modify or waive the requirements of this Section where the characteristics or layout of abutting properties would make a development of a unified or shared access and circulation system impractical.

4. Surface Parking – Parking areas, including landscaping, shall comply with all applicable requirements of these Regulations, including §6.11 and §6.14, except as otherwise noted in this section.

a. Parking shall not be located in front yards unless it legally exists at the time of application and unless there is no possible alternative and only for renovation of, and/or additions to, existing buildings (new buildings shall be located so as to place parking behind them). In such cases the commission may require a greater amount of landscaping to reduce the impact of the parking on the streetscape and any area between the existing parking and the front property line shall be landscaped in accordance with the front landscaping requirements in §6.14.C of these Regulations.
b. Parking that is visible from streets or public sidewalks shall be screened with a combination of landscaping and fencing, brick or stone walls, or earthen berms, such that the screening is a minimum of three (3) feet higher than the level of the parking lot and forms a substantially opaque screen, except where vehicular, pedestrian, or bicycle access ways are located or where screening must be reduced to allow for appropriate site lines, as determined by the Commission.
c. Where parking is located in a backyard, no landscaped area along the perimeter of the parking area shall be required, except on any side on which the parking abuts a residential zone, in which case the requirement shall be 5 ft.
d. Where applicable, landscaping requirements shall be reduced to 25% of the "internal landscaping" requirements in §6.14.E; however, rather than being required to be located internal to the parking area, this requirement may be located anywhere on the lot as landscaping and/or gathering space that incorporates landscaping anywhere on the lot, and may include natural and landscaped areas, pedestrian plazas, courtyards, recreation areas and the like.
e. Landscaping around and within parking lots shall be designed with low-impact development techniques to allow storm water runoff to drain into the landscaped areas to supplement irrigation and to pre-treat the runoff. The use of permeable pavements or surface materials is encouraged to allow infiltration of storm-water runoff, subject to appropriate maintenance agreements by the applicants and approval by the Town Engineer.
f. The parking surface shall be treated with bituminous pavement products unless the Commission approves an alternative surface, especially proposed brick or block porous pavement that is specially designed to increase on-site water retention for plant material and groundwater recharge and to reduce problems related to runoff. In deciding on proposed alternatives, the Commission shall consider the level of traffic generation of the proposed use(s), acceptability of proposed maintenance provisions, and ability of proposed surface to increase on-site water retention.

5. Parking Garages:
   a. Garages shall be located underground or shall have a permitted commercial or residential primary use for at least 50 ft. between the parking structure or portion of the structure used for parking and the frontage of the building, except that on corner lots, this requirement shall only apply to the more primary street, based on street classification. To minimize visibility from public streets, scale and design shall match proportions of neighboring buildings.
   b. Subject to approval of a Special Permit, the Commission may determine that, due to site constraints, a garage can only

reasonably be located adjacent to the street; in such case, setbacks may be increased by the Commission to allow for trees to be planted to provide visual softening of the upper levels of the structure, and the Commission may impose such other form, height, location, screening, or other requirements as it deems appropriate.

c. Garage access points shall be clearly identified with architectural elements and signage.

d. Garage access points shall be located to minimize the impact of vehicular turning movements on safe and efficient movement of pedestrians, cyclists, and other vehicles, and shall not be located within fifty (50) feet of any street intersection.

e. Signage and light fixtures within the parking structure shall not directly illuminate or produce disability glare on adjacent properties.

F. Parking Requirements – Parking requirements in the Town Center zone shall be as below, and in accordance with §6.11 of these Regulations; when the requirements of this Section are in contradiction to §6.11, the requirements of this section shall apply in the Town Center Zone.

"Compliance with the current required number of parking spaces" as referred to in this section may include approval of a Special Permit by the Commission to utilize one or more of the provisions in §4.5.D.3.d to reduce the total number of spaces required.

1. The minimum required number of parking spaces required shall be calculated using the chart below, and shall supersede the chart in §6.11.C.

Type of Use	**Minimum # of Parking Spaces to be Provided**
Multi-family dwelling units	
Studio/1 Bedrooms	1 /dwelling unit
2+ bedrooms	2/dwelling unit
Offices, financial institutions, retail stores (including Retail Restaurants), personal service shops	1/400 sq.ft. GFA
Medical offices, dental offices, clinics and laboratories, Out-patient surgical centers	1/300 sq.ft. GFA
Restaurants (with or without provisions for a dance floor and/or live entertainment); nightclubs, taverns, cafes, banquet halls, theaters, places of worship, assembly halls with or without fixed seats	1/150 sq.ft. GFA, 1/150 sq.ft. of GFA of outdoor patio/seating/ dining area in excess of footage of indoor dining area
Hotels, motels	1/unit plus see above for restaurant, tavern, banquet area, nightclub, and/or lounge area
Bed and Breakfast	2 spaces for the owner-occupant plus

	1 space per guest bedroom
Other uses not listed above	Parking facilities as determined by the Commission

2. Parking Requirements for Changes of Use within Existing Buildings –
   a. In the existing finished portion of a building, excluding any basement area, that existed as of January 1, 2017, all uses permitted in the TC zone shall be interchangeable and exempt from providing any additional parking spaces above that which existed as of January 1, 2017, as demonstrated by the most recently approved and implemented plan or as determined by the Commission or its agent. However, if any parking spaces that are not reserved for a particular use/user as of June 1, 2018, are to become reserved or are to be reserved for a different use category, compliance with the site and number of parking spaces shall be brought entirely into compliance with the current parking requirements, except as per §4.26.E.3.aabove; such compliance may include approval of a Special Permit by the Commission to utilize one or more of the provisions in §4.5.F to reduce the total number of spaces required.
   b. However, the number of existing parking spaces as of January 1, 2017 may not be reduced unless compliance with the current requirements is achieved.

3. Parking Requirements Applied to Additions to Existing GFA/Increases in Residential Units – Whenever an addition to the GFA of a building or an increase in the number of residential units on a property is proposed on a site that is not compliant or would no longer be compliant with the current minimum required number of parking spaces, the site and number of parking spaces shall be brought entirely into compliance with the current parking requirements, except as per §4.26.E.3.aabove; such compliance may include approval of a Special Permit by the Commission to utilize one or more of the provisions in §4.5.F to reduce the total number of spaces required.

4. Reserved Parking:
   a. Parking that is reserved for any specific use(s)/user(s)/use category(-ies) on a mixed-use site shall:
      - Not be counted in any "shared parking" calculation, and
      - Not increase any existing non-conformities
   b. In cases where the existing number of parking spaces is non-conforming, the reservation of parking space(s) for any existing/proposed use(s)/user(s)/use categories within the existing building shall require an equal number of spaces to otherwise be accounted for, subject to approval of a Special Permit by the Commission, as follows:
      i. Additional spaces may be physically constructed on the site;
      ii. Additional spaces may be physically provided for on another lot within 500 ft. of the property via perpetual agreement filed on the land records, provided that the spaces used for this provision are in excess of those required on said other lot, for up to 50% of the total number of existing spaces on the lot;
      iii. Fees in lieu of the spaces may be paid using the equation in Section 4.26.F.1.b.i.
      iv. Other spaces may be made available to the general public in accordance with Section 4.26.F.1.c.

v. Bicycle rack parking may be provided to account for 1 space, in accordance with Section 4.26.F.1.d.

vi. The maximum number of spaces which may be reserved under this provision shall not exceed 50% of the existing parking spaces.

vii. This provision shall only apply when no new construction or building/use expansions, increases, or additions are proposed. Therefore, compliance with the entire current parking requirement is not required per this section; only those spaces being reserved will be required to be otherwise accounted for per this section.

G. Reductions in Parking Requirements –

1. Subject to approval of a Special Permit, the Commission may allow for use of one or more of the following options, the extent of which is to be determined by the Commission. Under no circumstances shall the number of parking spaces be permitted to be reduced below the minimum number of parking spaces required for all dwelling units on the property.

   a. Shared Parking for Different Peak-Peak Uses – Subject to approval of a Special Permit by the Planning and Zoning Commission, the total parking requirements for the TC zone may be modified to permit shared parking based on the Parking Credit Schedule Chart below. Multiply the minimum parking requirement for each individual use by the appropriate percentage for each of the five (5) designated time periods and then add the resulting sums for each vertical column. The column total having the highest total value is the minimum shared parking space requirement for that combination of land uses.

PARKING CREDIT SCHEDULE CHART

	Weekday Night Midnight To 7:00 a.m.	Weekday Day 7:00 a.m. To 5:00 p.m.	Weekday Evening 5:00 p.m. To Midnight	Weekend Day 6:00 a.m. To 6:00 p.m.	Weekend Evening 6:00 p.m. To Midnight
Residential	100%	60	90	80	90
Office	5%	100	10	10	5
Retail	5%	80	90	100	70
Restaurant	10%	50	100	50	100
Entertainment/ Recreation	10%	40	60	80	100
Parking Required					

   b. Fees In-Lieu of Parking Spaces – Subject to approval by the Commission of a Special Permit in accordance with §7.5 and the requirements below, and in accordance with Connecticut General Statutes, up to 65% of the minimum parking requirement for a proposal by be met by payment of a fee to the Town in lieu of the actual construction of the required spaces.

      i. Dedicated Fund for Fees in Lieu of Parking: If approved, the required payment must be deposited in a fund established by the Town pursuant to and in accordance with §8-2c of the Connecticut General Statutes (as may be amended). Considerations: Such Special Permit shall only be approved if the Commission (1) finds that the number of minimum parking spaces required by these Regulationswould result in an excess of parking spaces for such use of land or in the area surrounding such use of land; or

(2) finds by a 2/3 vote that the number of minimum parking spaces required by these Regulations could not be physically located on the parcel of land for which such use is proposed.

Payment: The formula for the fee in lieu of parking shall be:

# of spaces for which fee is proposed X $2,000
= total fee

ii. One-hundred percent (100%) of the fee required by this regulation and approved by the Commission shall be made to the Town prior to the issuance of a Building Permit for the project for which the fee was approved. Funds paid to the Town as a fee in lieu of parking shall not be refundable for any reason. Such funds shall be used only as permitted by Connecticut General Statutes §8-2c, as amended; however, nothing herein shall be deemed to require the Town to undertake the acquisition, construction, expansion or development of any particular off-street public parking facility.

c. Parking Made Available to the General Public – The Planning and Zoning Commission may, subject to a Special Permit application and approval, allow privately owned/developed parking spaces that are made permanently available to the general public to be granted additional credit toward meeting the minimum parking requirement on a site as follows:

i. A designated space approved by Special Permit under this provision, which is made available to the general public at all hours may be counted as up to 1.5 spaces, ad determined by the Commission.

ii. A designated space that is made permanently available to the general public only for evening hours of 5:00 p.m. to 11:00 p.m. may be counted as up to 1.3 spaces, as determined by the Commission.

iii. The manner in which parking spaces approved by Special Permit under this section are made "permanently available to the general public" shall be a manner acceptable to and approved by the Commission, and shall include allowing all members of the general public to park in the designated space within the requirements of this section and appropriate designation of each space as public parking and posting of permitted applicable rules and restrictions.

iv. Any parking time limitation shall allow for a minimum parking period of 8 hours, except where applicable for evening hours as permitted above, where spaces shall allow parking for the entire 6 hour period.

v. There shall be no charge to the public for using the parking if private ownership is retained.

vi. In considering such Special Permit application, the Commission shall consider the elements noted in §4.5.D.and §7.5 as applicable, as well as the following: Compliance with all requirements of this section; the manner in which the spaces are proposed to be designated as available to the general public; the location of the proposed spaces to be designated as spaces available to the general public including their proximity to other public parking spaces and to one another; the general accessibility of these spaces as well as their accessibility from other public parking areas and from one another; the

centrality of these spaces in accessing nearby businesses; the proximity of these spaces to nearby businesses; the number of spaces proposed to be designated as available to the general public and their usefulness to the public based on that number; the visibility of these spaces to the general public when looking for parking in the vicinity of the site; the need for additional public parking in the vicinity of the site; and other elements which the Commission deems appropriate.

d. Bicycle Parking: Subject to approval by the Commission of an application for a Special Permit, a bicycle rack (or multiple racks) containing a number of bicycle spaces to be determined by the Commission may be provided to replace up to one (1) of the required parking spaces. In considering such Special Permit application, the Commission shall consider whether the provision of the bicycle parking spaces adequately eliminates the need for the auto parking space(s) that they are proposed to replace. Such bicycle racks shall be:
   i. Located on pavement or other hard surface that is adjacent to and accessible via a sidewalk or other safely accessible bicycle travel route
   ii. At the same grade as the sidewalk or access route
   iii. Within 50 ft. of a main entrance to the (or one of the)primary building(s)
   iv. Be securely and permanently anchored
   v. Designed such that the frame of a bicycle and one wheel can be locked to the rack with a high security u-shaped shackle lock if both wheels are left on the bicycle, and a bicycle six feet long can be securely held with its frame supported.

2. In considering a Special Permit application to utilize any of the options for reduction in parking requirements as provided in this Section, the Commission shall consider whether the proposed parking lot layout is designed to coordinate circulation and layout with any adjacent parking areas, to maximize efficiency of the parking area in terms of: number of spaces that can be created, access to public parking spaces by the general public, traffic safety, and ease of circulation, with particular attention to compliance with the access management requirements in this section, as determined by the Commission. The Commission may also require the provision of streetscape improvements on the property or within the right-of-way directly abutting the subject property, in order to maximize ease and safety of pedestrian access, and to encourage use of pedestrian access in place of or in addition to vehicle use. The applicant shall also, to the extent practicable as determined by the Commission, limit the number and location of solid waste and recycling-+ receptacles, including providing for multiple tenants to share receptacles and/or the location of the receptacles.

3. In considering any applications for Special Permit under this section, the Commission may require submittal of parking studies, data, and/or any other documentation in regard to the request which the Commission deems appropriate.

4. In considering any applications for Special Permit under this section, the Commission shall consider: Availability of public/on-street parking within the vicinity of the subject property; access management; peak hours associated with the proposed use(s); physical capability of the lot to support additional parking; demonstration by the applicant of

sufficiency of proposed number of parking spaces; and other elements which the Commission deems appropriate.

ARTICLE V

Lot and Building Requirements

§5.1 SCHEDULES OF LOT AND BUILDING REQUIREMENTS

No lot shall have an area, width or front, side or rear yard less than as given in the following tables. Where building lines have been otherwise established by municipal authority at a greater distance from the street than the front yard depth indicated below, such building line shall take precedence. No building or buildings shall occupy a greater percentage of the lot area than as set forth below nor exceed in height the amount set forth below unless modified elsewhere in these regulations. Parcels of land created for the purpose of locating a utility structure owned by the Wallingford Water, Sewer or Electric Divisions shall be exempt from these lot and yard requirements. *04/12/02*

§5.1A SCHEDULE OF LOT AND BUILDING REQUIREMENT – RURAL AND RESIDENTIAL DISTRICTS

			M I N I M U M Y A R D S (feet)			MAXIMUM BUILDING COVERAGE/HEIGHT	
DISTRICT	MINIMUM LOT AREA (Sq. Ft.)	MINIMUM FRONTAGE (feet)	FRONT (1)	SIDE (each)	REAR	COVERAGE (percent)	HEIGHT (feet)
RU-160	160,000	250	100	40	40	5	30
RU-120	120,000	250	75	40	40	5	30
RU-80	80,000	200	75	30	30	10	30
RU-40	40,000	150	50	30	30	10	30
R-18	18,000	100	40	20	30	15	30
R-15	15,000	85	20	15	30	20	30
R-11	11,250	75	20	12	30	25	30
R-6	6,250	50	10	6	30	33.5	30

(1) See Section 5.2.F

DISTRICT	MINIMUM LOT AREA (sq.ft.)	MINIMUM LOT FRONTAGE (feet)	MINIMUM YARDS (feet) FRONT (1)	MAXIMUM *** FRONT	SIDE (each)	REAR	MAXIMUM COVERAGE (percent)	BUILDING HEIGHT (feet)
YLB	11,250	75	30	N/A	12	30	15 (3/15/92)	30*
CLB	11,250	75	30	N/A	12	30	25 (3/15/92)	30*
CA-40 And CB-40	40,000	150	50	N/A	20	50	35	30*
DA (6/18/89)	25,000	50	10	N/A	6	30	35	30**
CA-12 And CB-12	12,000	80	40	N/A	12	40	35	30*
TC	25,000	50	1st-3rd Stories:0	5 ft. (2): May be increased to up to 20 ft. by the Commission to allow outdoor dining area or other public amenity per Section 4.26.E.1.b	0	O; Shall be 20 ft. when abutting a residential zone	0	45 or 4 stories, whichever is more restrictive
T-30	30,000	100	30	N/A	15	40	30	30 (01/30/07)

* Maximum building height may be increased by one foot for each additional foot of front, side and rear yard setback.

** Maximum building height may be increased by one foot for each additional two feet of front, side and rear yard setback.

*** Maximum yard requirements shall apply only to principal buildings.

(1) See Section 5.2.F

(2) Each floor above the 1st floor may be stepped back up to an additional 10 ft. from the front wall of the floor below it.

Corrected 7/30/03

§5.1C SCHEDULE OF LOT AND BUILDING REQUIREMENTS – INDUSTRIAL EXPANSION, INTERCHANGE DISTRICTS AND DESIGN DISTRICTS

DISTRICT	MINIMUM LOT AREA (sq.ft.)	MINIMUM FRONTAGE (feet)	MINIMUM YARDS (feet) FRONT (1)	SIDE (each)	REAR	MINIMUM OPEN SPACE (percent)	MAXIMUM COVERAGE (percent)	BUILDING HEIGHT (feet)*
RF-40								
Use Group A	40,000	150	50	20	50	25	30	30
Use Group B	40,000	150	50	20	50	25	17	30
I-40	40,000	150	50	25	50	0	35	30
1-20	20,000	100	25	12	30	0	33.5	30
IX	217,800	250	60	30	50	50	25	30*** 6/15/02
I-5	217,800	300	100	50	50	50	15	40**
DD-40	40,000	150	50	25	50	25	35	30
DD-18	18,000	100	25	12	30	25	35	30
QS0	200,000	500	50	50	50	0	10	30

(1) See Section 5.2.F.

* The maximum building height may be increased, provided the setback requirements are increased one foot for each additional foot of building height.

** The maximum height may be increased by one (1') foot for every two (2') feet by which the distance of such portion lies inside the nearest line of any required front, side and rear yard, to a maximum of sixty (60') feet. The maximum height may be further increased beyond sixty (60') feet by one (1') foot for every five (5') feet by which distance of such portion lies inside the nearest line of any required front, side and rear yard to a maximum height of eighty (80') feet, provided that no portion of the building shall lie within five-hundred (500') feet of a residential zone.

*** The maximum building height may be increased one foot for each five feet increased in the minimum front, side and rear yard setback.

§5.2 ADDITIONAL AREA REGULATIONS

A. Reduction of lot area or dimension - No lot shall be diminished in area nor shall any yard, court or other open space be reduced except in conformity with the requirements of these regulations.

B. Yard required for each building - Except as specifically provided herein, no part of any yard or other open space required about any lot may be included as part of a yard or other open space required for any other lot.

C. Projections into open space - Nothing in these regulations shall prohibit the projection of not more than 18 inches into a required yard by pilasters, belt courses, sills, cornices, balconies, roof overhangs/gutter systems or similar architectural features. Chimneys, covered decks, covered porches, and covered stairs shall comply with the minimum setbacks for the district in which they are located. Uncovered decks shall comply with the minimum front and sideyard requirements for the district in which they are located, but shall be permitted to project into required rear yards. Uncovered handicapped ramps are exempt from minimum setbacks.
02/17/17 10/02/94 01/30/90

D. Lot adjacent to railroad - In the case of a lot in a commercial or industrial district where contiguous to a railroad right-of-way, no side or rear yard, whichever is contiguous to the railroad, shall be required.

E. Prohibited transfers of property - No transfers of a piece or portion of property by sale, lease, easement, gift or otherwise shall be permitted when such transfer shall leave the remaining piece or parcel of land of such size, area or dimension as to be in non-compliance with any of the provisions of these regulations or as to increase or make more non-conforming any existing variation of non-conformity, or to make any existing building or structure into a non-conforming building or structure.
10/02/94

F. Required front yards - All required front yards listed in these regulations shall be computed as the distance specified in each instance plus a distance measured from the center line of the street as specified for each street classification and as established for each street in the following table:

Street Classification	**Distance of designated street line from street centerline (feet)**
Thoroughfares Center Street, Church Street (Yalesville), East Center Street, (west of N. Airline Road), Hall Avenue, Main Street (Yalesville), North Turnpike, River Road, Quinnipiac Street, Research Parkway, Route 68, Route 5, South Broad Street, South Turnpike Road.	**50**
Feeders Cook Hill Road, East Center Street (from N. Airline to Northford), North Elm Street, North Farms Road, North Main Street, North Main Street Extension, North Plains Industrial	**40**

Road, Northford Road, Old Colony Road, (from Main St. to Meriden line), South Elm Street, South Main Street, Toelles Road, Woodhouse Avenue.

Industrial **30**

Alexander Drive, Ball Street, Barnes Road (from North Main Street Ext. to Route 68), Barnes Park Road North, Barnes Park Road South, Brookside Drive, Capital Drive, Carpenter Lane, Dudley Avenue, Enterprise Road, Fairfield Boulevard, John Street, Ives Road, North Plains Highway, Old Colony Road (Cedar Lane to N. Colony), Pent Highway, Pent Road, Railroad Avenue, South Cherry Street (south of John Street), Sterling Drive, Thorpe Avenue, Tower Drive, Village Lane.

Collectors **30**

Cheshire Road, Chimney Hill Road, Christian Street, Clintonville Road, Crescent Street (to South Main), Durham Road (East Main Route 68), East Center Street (from Northford to Whirlwind Hill Road), East Main Street, Grieb Road (from North Elm to Leigus), Grove Street (south of Chimney Hill Road), Hanover Street, Harrison Road (west of Woodhouse), Highland Avenue, Hope Hill Road, Jones Road, Kondracki Lane, Leigus Road, Long Hill Road, Mansion Road, New Rock Hill Road, North Airline Road, North Branford Road, Northfield Road, Northrop Road, Oak Street (Yalesville), Old Durham Road (east of East Main), Parker Farms Road, Pond Hill Road, School House Road, South Airline Road, South Branford Road, South Orchard (from Route 5 to Pine Street), Tuttle Avenue, Ward Street, Ward Street Extension, West Dayton Hill Road, Whirlwind Hill Road, Williams Road. 4/17/90

Local **25**

All other streets in Town *09/12/90*

G. Spacing - Except on a single family residential lot, group buildings on a single lot shall be so arranged that the minimum distance between principal and/or accessory buildings shall be equal to or greater than one-half the sum of the heights of the affected buildings, or a minimum of 25 feet, whichever is greater.

H. Minimum lot area - In determining compliance with minimum lot area requirements of §5.1:

1. Land subject to easement for underground utilities may be included, but land subject to easement for above-ground public utility transmission lines shall not be included.

2. Area consisting of water courses and/or water bodies or subject to Stream Encroachment Lines, established under §25-4a & §25-4b of the CT General Statutes, shall not be included.

3. Land defined as wetland may be used to satisfy no more than 20% of the minimum lot area requirements, except in the following zones: *01/13/86*

District	Percent of Wetlands
Interchange	35%
RU-120	40%
RU-160	50%

4. Land with slopes in excess of 25% shall be used to satisfy no more than 20% of the minimum lot area requirements.

ARTICLE VI

Supplementary Regulations

§6.1 HEIGHT LIMITATION

A. The building height limit shall be applied separately for each wing or other distinct portion of the building.

B. Spires, water tanks and similar structures occupying an aggregate of not more than 10 percent of the building area, not to exceed 50 feet in height or such height shall be limited to the distance to the nearest property line, may be erected.

C. Spires, water tanks and similar structures which exceed a height of 50 feet shall require a Special Permit.

§6.2 ACCESSORY BUILDINGS - LOCATION

A. For the purposes of this section, a building or structure shall be considered "attached" if it: a) shares a wall with the primary building, or b) is connected to the primary building by a covered corridor or other building area that does not exceed 8 feet in length. Any other structure or building shall be considered "detached". *02/17/17*

B. Residential Districts. *09/19/92*

1. Private attached and detached garages, subject to the following conditions:
   a. Shall not exceed total lot coverage of: 1) – 936 sq.ft. or 2) – 50% of the livable floor area of the house up to maximum of 1,800 sq.ft.; whichever is greater. Anything above the generally permitted garage size, ad determined above, will require a Special Exception as provided by §4.1.D.7. 10/02/*94* *05/15/15*

   b. Detached private garages shall not exceed 15 feet in height.

2. Other detached accessory buildings customarily accessory to a single-family residence provided that the accessory building or structure shall:
   a. Not exceed 300 sq. ft. of gross floor area
   b. Not exceed 10 feet in height *10/02/94*
   c. Not be used for human habitation or the housing of animals or fowl except as per §4.1.F.7 and §4.1.F.10 *10/02/94*

3. Any garage or accessory building located in the rear yard and not part of or connected to the main building in any way, including by corridor or other covered area, shall be no less than 5 feet from any side or rear lot line except as per §4.1.F.7 and §4.1.F.10. 0*2/17/17 10/02/94*

4. Any garage or accessory building made part of or connected to the main building in any way shall comply with the yard requirements of the main building. *02/17/17*

5. Any detached garage or accessory building located in a side yard shall meet the yard requirements of the principal building in the district

in which it is located except that all stables must be located a minimum of 30 feet from any street or property line as per §4.l.F.7. *10/02/94*

C. Non-Residential Districts.

1. All buildings shall comply with the minimum front, side and rear yard dimensions of the principal building in the district in which they are located, except that any accessory building containing less than 500 sq.ft. GFA and less than 12 feet in height shall not require Site Plan Approval.

D. Bus Shelters

1. Any bus shelter required by the Planning and Zoning Commission as part of a residential development plan, which is under 50 sq.ft. in floor area, shall be exempt from the minimum yard requirements of the zoning district in which it is located. *05/17/03*

§6.3 BUILDING ON UNACCEPTED STREETS

A. The purpose of this section is to regulate the issuance of building permits for the erection of buildings or structures on lots abutting public highways or streets pursuant to authority contained in the provisions of Chapter 26, §8-27, of the CT General Statutes, 1958 Revision, as amended. *07/14/01*

B. No building permit shall be issued and no building shall be erected on any lot within the Town unless the lot abuts a public street and the street giving access to the lot upon which said building is proposed to be placed shall have been accepted by the Town or unless such street corresponds in its location and lines with a street shown on a subdivision plan approved by the Commission, on which the bond for required public improvements has been posted, and on file in the Town Clerk's office. No certificate of occupancy shall be issued until the provisions of §8.8 have been met. *07/14/01*

C. The provisions of this section shall not prevent the issuance of a building permit for the construction of farm or accessory buildings which are not in violation of any Town zoning or building regulations, or a less than substantial improvement to an existing building or structure.

D. Any building erected in violation of this section shall be deemed an unlawful structure, and the Building Inspector may bring an action to enjoin erection of such structure or cause it to be vacated or removed.

§6.4 SETBACKS FROM BODIES OF WATER

Purpose - To provide erosion control, reduce flooding, improve water quality and benefit wildlife.

A. No building shall be constructed within the Stream Encroachment Lines as set by the Connecticut Department of Environmental Protection.

B. Along the entire length of the Quinnipiac River and the Muddy River there shall be established a 50-foot greenbelt in single-family residential districts, and a 100-foot greenbelt in all commercial and industrial districts. The greenbelt area shall contain natural vegetation and where the Commission deems necessary additional plantings. The measurements of the greenbelt shall begin at the river's edge and move outward either 50 or 100 feet. Land disturbance shall be kept to a minimum within the greenbelt zone.

C. There shall be established a 25 foot buffer along the entire length of every other pond, lake, stream, brook, and other body of water within the Town.

D. Public multi-use trails which prohibit motorized vehicles and are less than 18 feet in width shall be permitted in the greenbelt. *12/12/98*

E. This section shall not apply to road, driveway or utility crossings. *07/14/01*

§6.5 FLOOD PLAIN REGULATIONS

06/18/00

A. Purpose:

Note - For the purpose of this section only:

a. Manufactured home shall mean a structure, transportable in one or more sections which is built on a permanent chassis and designed to be used with or without a permanent foundation when connected to the required utilities. The term also includes park trailers, travel trailers, recreational vehicles and similar transportable structures placed on a site for 180 consecutive days or longer and intended to be improved property.

b. Structure shall mean a walled and roofed building, including a gas or liquid storage tank, that is principally above ground, as well as a manufactured home.

1. To protect human life and health,
2. to minimize expenditure of public money for costly flood control projects,
3. to minimize the need for rescue and relief efforts associated with flooding and generally undertaken at the expense of the general public,
4. to minimize prolonged business interruptions,
5. to minimize damage to public facilities and utilities such as water and gas mains, electric, telephone and sewer lines, streets and bridges located in areas of special flood hazard,
6. to help maintain a stable tax base providing for the use and development of areas of special flood hazard, while minimizing future flood blight areas,
7. to insure that potential buyers are notified that property is in an area of special flood hazard, and
8. to ensure that those who occupy the area of special flood hazard assume responsibility for their actions.

B. Location:

The special flood hazard areas within the Town of Wallingford are identified by the Federal Emergency Management Agency (FEMA) in its Flood Insurance Study (FIS) for New Haven County, Connecticut, dated May 16, 2017, accompanying Flood Insurance Rate Maps (FIRM), dated May 16, 2017(Panels – 09009CO163J,09009CO164J,09009CO284J,09009CO302J, 09009CO303J,09009CO304J,09009CO307J,09009CO309J,09009CO311J,09009CO312J, 09009CO314J,09009CO316J,09009CO317J,09009CO318J,09009CO336J), and December 17, 2010 (Panels- 09009CO168H,09009CO301H,09009CO306H, 09009CO0308H,09009CO330H),and other supporting data applicable to the Town of Wallingford, and any subsequent revisions thereto, are adopted by reference and declared to be a part of this ordinance. Since mapping is legally adopted by reference into this ordinance it must take precedence when more restrictive until such time as a map amendment or map revision is obtained from FEMA. The area of special flood hazard includes any area shown on the FIRM as Zones A and AE, including areas designated as floodway on a FIRM. Areas of special flood hazard are determined utilizing the base flood elevations (BFE) provided on the flood profiles in the Flood Insurance Study (FIS) for a community. BFEs provided on the Flood Insurance Rate Map (FIRM)are only approximate (rounded up or down) and should be verified with the BFEs published in the FIS for a specific location. A copy of this report is on file in the Planning

Department. *05/16/17, 12/17/10*

C. Requirements for Development:

Any proposed building structure, or use located in Zones A, AE, as delineated on the FIRM, shall conform to the following requirements:

1. All Buildings and Structures
   a. Buildings and structures shall be designed with low flood damage potential.
   b. Buildings and structures shall be constructed and placed on the lot so as to offer the minimum resistance to the flow of flood waters.
   c. Structures shall be firmly anchored to prevent flotation which may result in damage to other structures.
   d. Service facilities such as electrical and heating equipment shall either be constructed at or above the elevation of the area of special flood hazard, or be otherwise structurally flood-proofed.
   e. New construction or substantial improvements of elevated buildings that include fully enclosed areas formed by foundation and other exterior walls below the base flood elevation shall be designed to preclude finished living space and designed to allow for the entry and exit of floodwaters to automatically equalize hydrostatic flood forces on exterior walls.
      1. Designs for complying with this requirement must either be certified by a professional engineer or architect or meet the following minimum criteria:
         (a) provide a minimum of two openings having a total net area of not less than one square inch for every square foot of enclosed area subject to flooding.
         (b) the bottom of all openings shall be no higher than one foot above grade, and
         (c) openings may be equipped with screens, louvers, valves or other coverings or devices provided they permit the automatic flow of floodwaters in both directions.
      2. Electrical, plumbing, and other utility connections are prohibited below the base flood elevation.
      3. Access to the enclosed area shall be the minimum necessary to allow for parking of vehicles (garage door) or limited storage of maintenance equipment used in connection with the premises (standard exterior door) or entry to the living area (stairway or elevator).
2. Residential Buildings - New construction and substantial improvement of residential structures shall have the lowest floor, including the basement, elevated to at least two feet above the base flood elevation, or higher, as determined by the Commission. *01/17/93, 09/19/93*
3. Non-residential Construction - New construction and substantial improvement of any commercial, industrial or other non-residential structure shall either have the lowest floor, including basement, elevated to the level of the base flood elevation, or together with attendant utility and sanitary facilities, shall:
   a. Be flood-proofed so that below the base flood level the structure is watertight with walls substantially impermeable to the passage of water;
   b. have structural components capable of resisting hydrostatic and hydrodynamic loads and effects of buoyancy; and
   c. be certified by a registered professional engineer or architect

that the standards of this subsection are satisfied. Such certifications shall be provided to the Town Engineer.

4. Manufactured Homes
   a. Manufactured homes shall be anchored in accordance with §6.5.D.1.
   b. For new manufactured home parks and manufactured home subdivisions, for expansions to existing manufactured home parks and manufactured home subdivisions; for newly placed or substantially improved manufactured homes placed in existing manufactured home parks; and for manufactured homes not placed in a manufactured home park or manufactured home subdivision, and for manufactured homes placed in an existing manufactured home park or subdivision on which a manufactured home has incurred substantial damage as a result of a flood, require that: *12/17/10*
      1. Stands or lots shall be elevated on compacted fill or on pilings so that the lowest floor of the manufactured home shall be at or above the base flood level.
      2. Adequate surface drainage and access for a hauler shall be provided.
      3. In the instance of elevation on pilings, that: lots shall be large enough to permit steps; piling foundations shall be placed in stable soil no more than ten feet apart, and reinforcement shall be provided for pilings more than six feet above the ground level.
      4. All recreational vehicles placed on sites within special flood hazard areas must be either on the site for fewer than 180 consecutive days and be fully licenses and ready for highway use, or meet the elevation and anchoring requirements of a manufactured home required in Sections 6.5.C.4 and 6.5.D.1. A recreational vehicle is ready for highway use if it is on its wheels or jacking system, is attached to the site only by quick disconnect type utilities and security devices, and has not permanently attached additions. *12/17/10*

5. Floodways - Within the floodway, designated on the Flood Insurance Rate Map and those determined as a result of C.6, all encroachments, including fill, new construction, substantial improvements to existing structures, repairs to substantially damaged structures and other developments shall be prohibited unless certification, with supporting technical data, by a registered professional engineer is provided demonstrating, through hydrologic and hydraulic analyses performed in accordance with standard engineering practice, that encroachments shall not result in any (0.00 feet) increase in flood levels during occurrence of the base flood discharge. Fences in the floodway must be aligned with the flow and be of an open design. *12/17/10*

6. Standards for watercourses without established base flood elevations (un-numbered A zone), adopted floodways and/or flood mapping.
   a. The Commission shall require base flood elevation (BFE) data be provided with any application for new construction, substantial improvement, repair to structures which have sustained substantial damage or other development in Zone A without FEMA-published BFE(un-numbered A Zone). The Commission shall obtain, review and reasonably utilize any BFE and floodway data available from a federal, state or other source, including data developed for subdivision proposals, as criteria for requiring that new

construction, substantial improvements, repair to structures which have sustained substantial damage or other development in un-numbered A Zones on the community's Flood Insurance Rate Map (FIRM)meet the standards in Sections 6.5C and 6.5D. If no BFE can be determined, the lowest floor, including basement, must be elevated to two (2) feet above the highest adjacent grade next to the structure.

b. When BFEs have been determined with Zones A and AE on the community's FIRM but a regulatory floodway has not been designated, the Commission must require that no new construction, substantial improvements, repair to structures which have sustained substantial damage or other development, including fill, shall be permitted which will increase the water surface elevation of the base flood more than one (1.0) foot at any point within the community when all existing and anticipated development is considered cumulatively with the proposed development.

12/17/10

c. The Commission may request floodway data of an applicant for watercourses without FEMA-published floodways. When such data is provided by an applicant or whenever such data is available from any other source (in response to the municipality's request or not), the community shall adopt a regulatory floodway base on the principle that the floodway must be able to convey the waters of the base flood without increasing the water surface elevation more than one (1.0) foot at any point within the community.

7. Standards for Development in Areas of Shallow Flooding (AO Zone)-Located within the special flood hazard areas are areas designated as shallow flooding areas (AO Zones). These areas have flood hazards associated with base flood depths of one (1) to three (3) feet where a clearly defined channel does not exist and where the path of flooding is unpredictable and indeterminate. In AO zones, the following provisions apply:

a. For residential structures, all new construction, substantial improvements and repair to structures that have sustained substantial damage shall have the lowest floor, including basement, elevated to at least two feet above the depth number specified on the Flood Insurance Rate Map (FIRM), in feet above the highest adjacent grade.
If no depth number is specified, the lowest floor, including basement, shall be elevated, at least two feet above the highest adjacent grade.

b. For non-residential structures, all new construction, substantial improvements and repair to structures that have sustained substantial damage shall:

i. Have the lowest floor, including basement, elevated to the depth number specified on the Flood Insurance Rate Map (FIRM), in feet, above the highest adjacent grade. If no depth number is specified, the lowest floor, including basement, shall be elevated at least two feet above the highest adjacent grade; or

ii. together with attendant utility and sanitary facilities be completely flood-proofed to or above the depth number, in feet, specified on the FIRM above the highest adjacent grade, or if no depth number is specified at

least two feet above the highest adjacent grade, so that any space below that level is watertight with walls substantially impermeable to the passage of water and with structural components having the capability of resisting hydrostatic and hydrodynamic loads and effects of buoyancy. Designs for complying with this requirement must be certified by either a Connecticut licensed professional engineer or architect.

c. On-site drainage for all proposed structures in AO Zones located on slopes shall provide adequate drainage paths to guide flood waters around and away from such structures.

d. Fully enclosed areas below the lowest floor in AO Zones must comply with the provisions of Section 6.5.C.1.e for hydraulic flood vents.

8. Compensatory Storage. The water holding capacity of the floodplain, except those areas which are tidally influenced, shall not be reduced. Any reduction caused by filling, new construction or substantial improvements involving an increase in footprint to the structure, shall be compensated for by deepening and/or widening of the floodplain. Storage shall be provided on-site, unless easements have been gained from adjacent property owners; it shall be provided within the same hydraulic reach and a volume not previously used for flood storage; it shall be hydraulically comparable and incrementally equal to the theoretical volume of flood water at each elevation, up to and including the 100-year flood elevation, which would be displaced by the proposed project. Such compensatory volume shall have an unrestricted hydraulic connection to the same waterway or water body. Compensatory storage can be provided off-site if approved by the municipality.

9. Equal Conveyance. Within the floodplain, except those areas which are tidally influenced, as designated on the Flood Insurance Rate Map (FIRM) for the community, encroachments resulting from filling, new construction or substantial improvements involving an increase in footprint of the structure, are prohibited unless the applicant provides certification by a registered professional engineer demonstrating, with supporting hydrologic and hydraulic analyses performed in accordance with standard engineering practice, that such encroachments shall not result in any (0.00 feet) increase in flood levels (base flood elevation). Work within the floodplain and the land adjacent to the floodplain, including work to provide compensatory storage shall not be constructed in such a way so as to cause an increase in flood stage or flood velocity. *12/17/10*

D. General Standards:

Within Zones A, and AE, the following standards shall be met prior to issuance of a Building Permit for any proposed construction/development:

1. Anchoring

a. All new construction and substantial improvements shall be anchored to prevent flotation, collapse or lateral movement of the structure;

b. All new or substantially improved manufactured homes or manufactured home parks to be placed in an area of special flood hazard shall be anchored to resist flotation, collapse, or lateral movement by providing over-the-top and frame ties to ground anchors. Specific requirements shall be that:
   1. Over-the-top ties be provided at each of the four corners of the manufactured home, with two additional ties per side at intermediate locations, with manufactured homes less than 50 feet long requiring one additional tie per side;
   2. Frame ties be provided at each corner of the home with five additional ties per side at intermediate points, with manufactured homes less then 50 feet long requiring four additional ties per side;
   3. All components of the anchoring system be capable of carrying a force of 6240 pounds; and
   4. Any addition to the manufactured home shall be similarly anchored.

2. Construction Material and Methods
   a. All new construction and substantial improvements shall be constructed using methods and practices that minimize flood damage, and with materials and utility equipment resistant to flood damage.
3. Utilities
   a. All new and replacement water supply systems shall be designed to eliminate infiltration of flood waters into the system;
   b. New and replacement sanitary sewage systems shall be designed to minimize or eliminate infiltration of flood waters into the systems and discharge from the systems into flood waters;
   c. On site waste disposal systems shall be located to avoid impairment to them or contamination from them during flooding.
4. Subdivision Proposals
   a. All subdivision proposals shall be consistent with the need to minimize flood damage;
   b. All subdivision proposals shall have public utilities and facilities such as sewer, gas, electrical, and water systems located and constructed to minimize flood damage;
   c. All subdivision proposals shall have adequate drainage provided to reduce exposure to flood damage; and
   d. Base flood elevation data shall be provided for subdivision proposals and other proposed development which contain at least 50 lots 5 acres.
5. Above-Ground Storage Tanks – Above-ground storage tanks (oil, propane, etc.) which are located outside or inside of the structure must either be elevated above the base flood elevation (BFE) on a concrete pad, or be securely anchored with tie-down straps to prevent flotation or lateral movement, have the top of the fill pipe extended above the BFE, and have a screw fill cap that does not allow for the infiltration of flood water.
6. Portion of Structure in Flood Zone – If any portion of a structure lies within the Special Flood Hazard Area (SFHA), the entire structure is considered to be in the SFHA. The entire structure must meet the construction requirements of the flood zone. The structure includes any attached additions, garages, decks, sunrooms, or any other structure attached to the main structure. Decks or porches that extend into a more restrictive flood zone will require the entire structure to meet the standards of the more restrictive zone.

7. Structures in Two Flood Zones – If a structure lies within two or more flood zones, the construction standards of the most restrictive zone apply to the entire structure (i.e, V zone is more restrictive than zone; structure must be built to the highest BRE). The structure includes any attached additions, garages, decks, sunrooms, or any other structure attached to the main structure. (Decks or porches that extend into a more restrictive zone will require the entire structure to meet the requirements of the more restrictive zone.)
8. No Structures Entirely or Partially Over Water – New construction, substantial improvements and repair to structures that have sustained substantial damage cannot be constructed or located entirely or partially over water unless it is a functionally dependent use or facility. *12/17/10*

E. Application

A Development Permit, in addition to or in conjunction with all other permits require by local, state, or federal agencies, shall be obtained from the Commission prior to construction or development in special flood hazard zones established in §6.5.B. Development proposals will be reviewed to determine that the proposed development and building site will be reasonably safe from flooding. *12/17/10*

1. When the type or activity proposed requires another permit from the Commission, then the applicant for a Development Permit shall become part of the Planning and Zoning application. The application shall file the following information, in addition to the other information required, under these regulations:
   a. Elevation in relation to mean sea level of the lowest floor (including basement) of all structures;
   b. Elevation in relation to mean sea level to which any structure has been flood-proofed;
   c. Certification by a registered professional engineer or architect that flood-proofing methods are adequate;
   d. Description of the extent to which any water course will be altered or relocated as a result of proposed development;
   e. Delineation of the flood plain boundaries shown on plans submitted as part of the application.

The foregoing information shall be specifically shown on the appropriate plans in addition to any information that may be required by the Commission, Building Official, or Town Engineer for their review.

2. When the type of activity proposed does not require another permit from the Commission, the applicant shall file the information required in §6.5.E.1 with the Planning Office. The Commission shall grant or deny the Development Permit within 35 days after submittal to the Planning Office.
3. The Commission shall obtain the following information from the builder or owner and maintain all information and records for public inspection:
   a. Obtain and record the actual elevation (in relation to mean sea level) of the lowest floor (including basement) of all new or substantially improved structures within the areas of special flood hazard.

b. For all new or substantially improved flood-proofed structures within the area of special flood hazard:
   1. Verification and recording of the actual elevation (in relation to mean sea level), and
   2. Maintain the flood proofing certifications required in §6.5.E.l.c.

F. Miscellaneous Requirements *10/02/94*

1. Alteration of Watercourses. The alteration or relocation of watercourses shall be prohibited. If a watercourse is altered or relocated, assure that maintenance is provided within the altered or relocated portion of said watercourse so that the flood carrying capacity is not diminished. Notify the adjacent communities and the Department of Environmental Protection (DEP), Inland Water Resources Division, prior to any alteration or relocation of a watercourse, and submit evidence of such notification to the Federal Emergency Management Agency. *12/17/10*
2. No garbage, trash, landscape debris, leaves or similar material shall be placed in any stream, channel, pond or basin which regularly or periodically carries or stores water.
3. For purposes of this section, substantial improvement, including modifications, additions, and reconstruction shall be counted cumulatively for a period of 10 years.

§6.6 REAR LOTS

A. Each rear lot shall be connected by a strip of land or accessway, in fee simple ownership by owner of said rear lot, to an existing town road or a subdivision road approved by the Commission and on file with the Town Clerk.

B. Each access way shall be at least 25 feet in width.

C. The maximum number of adjoining access ways shall not exceed two.

D. The access way shall not exceed a length of:
   1. 220 feet in a 18,000 sq. ft. minimum lot size district.
   2. 310 feet in a 40,000 sq.ft. minimize lot size district.
   3. 440 feet in a 80,000 sq.ft., 120,000 sq. ft., and 160,000 sq. ft. minimum lot size district. *01/13/86*

E. The area of such access way shall not be included in the minimum required area of the lot.

F. Rear lot shall be allowed only in districts with minimum lot sizes of 18,000 sq.ft., 40,000 sq.ft., 80,000 sq.ft., 120,000 sq.ft., and 160,000 sq.ft. *01/13/86*

G. In districts where they are permitted, rear lots shall meet the following requirements:

   1. In zones with minimum lot area requirement of 18,000 square feet, the lot shall have a minimum lot area of 40,000, a minimum width at the end of the accessway of 150 feet and a minimum lot width of 200 feet.
   2. In zones with minimum lot area of 40,000 square feet, the lot shall have a minimum lot area of 62,500 square feet, a minimum width at the end of the accessway of 200 feet, and a minimum lot width of 250 feet.
   3. In zones with minimum lot area of 80,000 square feet, the lot shall have a minimum lot area of 80,000 square feet, minimum width at the end of the accessway of 200 feet, and a minimum lot width of 250 feet.
   4. In zones with minimum lot area of 120,000 sq.ft., the lot shall have a minimum lot area of 120,000 sq.ft., a minimum width at the end of the accessway of 250 feet, and a minimum lot width of 275 ft. *01/13/86*
   5. In zones with minimum lot area of 160,000 square feet, the lot shall have a minimum lot area of 160,000 square feet, a minimum width at the end of the accessway of 250 feet, and a minimum lot width of 300 feet.

H. Driveways must comply with all applicable Sections of these regulation, including applicable portions of Off-Street Parking and Loading Facilities – Design Standards *01/01/13*

§6.7 USE OF MOBILE HOME FOR SLEEPING OR LIVING PURPOSES

No mobile home shall be used for sleeping or living purposes; provided, however, that in any district the ZEO may issue a permit for one mobile home to be occupied for sleeping or living purposes by the owner of the lot on which it is to be located, during the construction of a dwelling on the same lot, for a period not exceeding one year from the issuance of the permit for such dwelling. The Commission may renew the permit only once for such mobile home for a period of not more than one year.

§6.8 OPEN SPACE SUBDIVISION
01/19/02

A. The purpose of this section is to provide a method of development for land which permits variation in lot sizes for one-family dwellings in R-18, RU-40, RU-80 and RU-120 Districts for the purpose of protecting surrounding properties, persons and neighborhoods; to provide for future parks and/or recreation areas. Also, by encouraging minimal lengths of public roadways to ensure proper surface drainage, flood control and soil conservation; to promote the preservation and protection of existing trees, ground cover, topsoil, streams, rock outcroppings and scenic and historical sites from dangers and damage caused by excessive and poorly planned grading for streets and building sites and to minimize future municipal maintenance and repair expenses in such neighborhoods.

B. The Commission may grant approval to an application for an open space development of single-family detached residences, subject to a Special Permit in accordance with §7.5 and upon the following conditions:

1. Lot area standards for all lots specified in these regulations shall be as per §6.8.C. of the Town of Wallingford Zoning Regulations.
2. The tract shall be a contiguous tract in single ownership or consolidated into a single contiguous tract by a number of different owners by means of a binding agreement which will assure the uniform treatment and implementation of an overall open space plan for the entire tract from the time of application and continuing thereafter.
3. The tract shall be at least 10 acres in size in an R-18 zone, 15 acres in an RU-40 zone, and at least 25 acres in RU-80 and RU-120 zones.
4. The total number of proposed residences shall be determined by dividing the total acreage of the tract minus,
   a. actual proposed roadway right-of-way area,
   b. all wetland and watercourse areas,
   c. land and slopes in excess of 25 percent,
   d. floodway and floodplain areas,
   e. land subject to easement for above-ground utility transmission lines

   by the conventional minimum lot size for the district in which the tract is located.
5. No lots shall be proposed with required frontage on, or access to, Town roads not built as part of an open space subdivision. A minimum open space area of 60 feet from the property line shall be maintained in the subdivision along Town roads that are not part of an open space development. A Conservation Easement with restrictions acceptable to the Planning and Zoning Commission shall be placed on this open space area to maintain it in its natural state. If this 60 foot area is an existing lawn or meadow, a mixture of evergreen and deciduous seedlings shall be planted at a minimum density of one (1) every 25 sq.ft.
6. Land shall be set aside for conservation, park and/or recreation purposes, the total area of which shall not be less than 60% of the total net acreage in RU-120 and RU-80 districts and 40% of

the total net acreage in RU-40 and R-18 districts; "net acreage" being defined as the area of the tract to be developed less any land area required to be set aside for public streets. Areas comprising slopes of more than 25%, wetlands, watercourses, land subject to easements for above-ground public utility transmission lines and floodplain as designated on the Flood Insurance Rate Map may comprise in combination no more than 40% of the required open space. Also, the Commission may require at least 50% of the proposed open space to be contiguous. For purposes of this regulation the term "contiguous open space" may include roadway crossings and culverts. Stormwater management ponds or basins may be included as part of the minimum required open space.

7. The area proposed to be developed under the open space subdivision provisions shall be served by public water and public sewer mains and street lighting, as evidenced by a letter of intent from the Wallingford Public Utilities Commission, except that this requirement may be modified by the Commission in RU-40, RU-80 and RU-120 districts provided technical evidence is submitted by the developer that the use of individual wells and individual septic tanks will not endanger the public health and welfare of the area.
8. All interior roads shall comply with the standards specified in the Town's Subdivision Regulations except that pavement width may be waived by the Commission. Street connections shall generally be encouraged to minimize the number of new cul-de-sacs to be maintained by the Town and to facilitate easy access to and from homes in different parts of the property (and on adjoining parcels). The Commission may require that cul-de-sacs be designed with a central island containing indigenous trees and shrubs.
9. Rear lots shall not be permitted in R-18 or RU-40 Open Space Subdivisions.
10. Open Space:
    A. The Commission recognizes that one of the Town's assets is its varied and unique physical features and open space. It is necessary to preserve these natural assets by encouraging development techniques, which will accomplish the objective of preserving this asset. Open Space in an Open Space Subdivision must accomplish one of the following objectives:
        1. Preserving land as common open space to preserve or enhance the appearance, character and natural beauty of an area.
        2. Preserving land to serve park and recreation needs;
        3. Preserving land for purposes of conserving natural resources.
        4. Preserving and protecting particular areas and terrain having qualities of natural beauty of historic interest.
        5. Protecting streams, rivers, ponds and wetlands so as to avoid flooding, erosion and water pollution.
        6. Preserving and protecting agricultural areas as an historic use of land in Wallingford.
        7. Preserving open space to replicate a traditional New England green.
        8. Providing larger open space areas by laying out new open space contiguous to existing open space on adjacent parcels.

11. All open space area shall be preserved and maintained solely for one or more of the purposes set forth in §6.8.B.11. of this regulation and whose ownership shall be one of the following methods:
    a. By deed in fee simple to the owner of each lot in the Open Space Subdivision of an undivided interest in the open space area proportionate to the total number of lots in the subdivision. Each lot owner shall be responsible for the preservation and maintenance of the open space area including payment of any expense in effecting such purposes.
    b. By deed in fee simple to the Town or to a land trust or other non-profit organization dedicated to the conservation of open space if acceptable to the Town or other entity.
12. Any additional lots created by resubdivision of property in an existing Open Space or Cluster subdivision approved under these regulations must comply with lot size, frontage and building setback requirements of §5.1.A. of the Wallingford Zoning Regulations. Any such resubdivision will be considered as modification to an existing Open Space Subdivision Special Permit and will be subject to all sections of §7.5. of the Wallingford Zoning Regulations except that only properties abutting the proposed re-subdivided properties must be notified as per §7.5.D.1.c. of the Wallingford Zoning Regulations.
13. After subdivision maps have been filed, no property shown as open space on an approved Open Space Subdivision may be re-subdivided into buildable lots or made part of any new or existing building lot.
14. All open space shown on an approved subdivision map shall be left in its natural state unless otherwise approved by the Commission. Any use of this open space not approved by the Commission, including, but not limited to, lawn and garden encroachments, the dumping of both biodegradable and non-biodegradable material, and filling, shall be considered a violation of these regulations and enforcement action may be taken.

10/18/03

C. SCHEDULE OF LOT AREA, FRONTAGE AND SETBACK REQUIREMENTS

1a. The following requirements shall apply to all lots created on new roads in open space subdivisions:

District	**Minimum Lot Area (sq.ft.)**	**Minimum Lot Frontage (feet)**	**Front**	**Side (feet)**	**Rear**	**Building Coverage**
RU-120	40,000	125	50	20	40	10
RU-80	40,000	125	50	20	40	10
RU-40	18,000	100	30	15	30	20
R-18	10,800	80	30	15	30	20

1b. Building Height requirements for all zones shall be as per §5.1.A. of the Zoning Regulations of the Town of Wallingford

2a. The following requirements shall apply to all lots created as part of any open space subdivision which have frontage on an accepted town or State road on the date the subdivision is submitted:

District	**Front**	**Side**	**Rear**	**Building Height and Coverage**
RU-120	75	40	40	*
RU-80	75	30	30	*
RU-40	50	20	30	*
R-18	40	15	30	*

2b. Building Coverage and Height figures for all zones as per §5.1.A of the Zoning Regulations of the Town of Wallingford. *06/15/02*

§6.9 SIGNS *10/16/05*

A. All signs shall conform to the following regulations:

B. Signs not requiring a permit:

1. Memorial signs or tables, names of buildings and date of erection when cut into any masonry surface or when affixed directly to the front face of the building and parallel to such front face.
2. In residential districts, a "For Sale", "For Lease" or "For Rent" sign, not over 6 square feet in area. In commercial and industrial districts, a "For Sale", "For Lease" or "For Rent" sign not exceeding 32 square feet in area. Said signs shall be removed within 5 days of the property being removed from the market.
3. In residential districts, temporary directional signs in connection with the notification of open houses to be held in connection with the sale or rental of premises: There shall be a limit of not more than 4 signs per open house, not exceeding 4 square feet in area per sign. Such signs shall be used only on the day of the open house and shall be removed no later than one-half hour after the completion of the open house, but no later than 7:00 p.m. on the same day installed.
4. Informational and traffic signs, historical markers, authorized or erected by a public agency.
5. Display of the national or state flag.
6. Temporary displays or lighting as customary part of holiday decorations.
7. Signs that warn of danger, prohibit trespassing or direct traffic on the lot. Such signs shall not exceed a total area of 2 square feet each and shall contain no advertising information other than the name or logo of the business.
8. Industrial promotional signs under the auspices of the Town Economic Development Commission, limited to 3 locations within the Town.
9. A sign not over 2 square feet identifying the name(s)and address of the occupant(s) of a dwelling unit.
10. Bulletin boards not over 10 square feet in area for public charitable or religious institutions when located on the premises of said institutions.
11. A sign not exceeding 32 square feet in area denoting the architect, engineer, and/or contractor when placed upon the property where work is under construction, and located a minimum of 10 feet from the property boundaries.
12. A sign, on the premises, not over 24 square feet in area, for a period not to exceed one year, for an approved subdivision. The Commission may grant up to 3, one-year extensions.
13. A temporary "help wanted" sign not over 15 square feet limited to 90 days in any calendar year.
14. One temporary, on-premises sign announcing a tag or garage sale shall be permitted for a period not to exceed 3 days, or 9 days in any calendar year. Two off-premises signs announcing the tag or garage sale shall be permitted for a period not to exceed 3 days or 9 days in any calendar year.
15. Any flag, badge or insignia customarily displayed by any governmental agency, civic, fraternal, religious or similar organization.
16. "Avenue Banners" erected by a recognized, non-profit, "Revitalization/Beautification Association", subject to the following conditions:

a. The maximum size per banner shall be 31″ X 60″.
b. The banners shall be limited to TC zones. *08/17/18*
c. Only one (1) banner per utility pole shall be permitted.

17. Scoreboards on Town of Wallingford property.
18. A sign erected by a fraternal, civic, religious or service organization or club, merely announcing its presence in the town and the time and place of its regular meeting, provided all such signs shall be grouped together with a common support structure and each component shall not exceed 1 square foot in area. Such group of signs shall be limited to 2 locations in Town.
19. Directional signs for educational and religious uses by a non-profit corporation or governmental unit, non-profit health care facility or hospital, or municipal building use. Each sign shall not exceed 6″ X 36″, and shall be only at points approved by the Town Traffic Division.
20. Temporary signs or street banners for a municipal, charitable or non-profit organization may be erected for a period not to exceed 45 days in any calendar year.
21. A temporary sign or signs for a political organization may be erected as follows:
    a. Regular election - signs permitted not earlier than the first Tuesday after Labor Day prior to Election Day.
    b. Primary, special election or referendum - signs permitted not earlier than 25 days prior to balloting
    c. Signs shall be removed within 5 days of the balloting except in the instance of a primary, special election or referendum that occurs within the regular November election sequence, such signs shall be removed within 5 days of the regular election.
22. A temporary sign announcing anticipated occupancy or new management of a site or building shall be permitted for a period not to exceed 3 months. Such sign area shall not exceed 24 square feet if it is free standing and shall not exceed the maximum permitted for permanent sign if it is affixed to a building. This sign shall be removed when the business is opened.
23. One temporary marketing ground sign per development, subject to the following:
    a. Shall be non-illuminated.
    b. Shall not exceed 15 feet in total height.
    c. Shall be considered a temporary sign permitted to remain in place for a period of one year. A minimum of 2, one-year renewals may be granted.
    d. Shall only display the name of the development, its owner, its availability for lease and/or sale, and a telephone number.
    e. If the lots(s) of the development do not contain frontage on I-91, the maximum size of the sign shall not exceed 64 square feet.
    f. If the lot(s) of the development contain frontage on I-91, the maximum size of the sign shall not exceed 162 square feet. Any sign exceeding 64 square feet shall be oriented to, and only legible from I-91.
    g. A development which has a lot(s) on I-91, which does not orient the temporary marketing sign to I-91, the maximum size of the sign shall not exceed 64 square feet.
24. Window signs displayed in commercial and industrial zones. *06/09/14*
    a. In the TC zone, window signs shall be subject to the following:
        1. Window signs shall not occupy more than 25% of the area of any

individual window, as defined by separating framework, including glass portions of doors/entryways

2. Any window signage shall be displayed/located only in windows/glass doorways/glass entryways that are part of the space occupied by the entity which is displaying the signage, or common space that includes the entity that is displaying the signage
3. Window signs shall not flash or scroll, but may change messages/graphics
4. Under no circumstances shall any A-frame ("sandwich board") sign be used as a window sign or otherwise be placed inside a building in a manner such that the primary view of such sign is through the window

25. Sponsors' signs and banners on Town of Wallingford high School athletic fields under the jurisdiction of the town of Wallingford Board of Education, which have been granted approval by the Wallingford Board of Education or its designee, and in conformance with the policies of the Board of Education regarding such signs. *04/24/14*

C. Signs requiring registration: *12/05/09*

1. Temporary business signs, either attached or freestanding, are allowed up to six (6) times per calendar year for a period not to exceed fourteen (14) days per occasion.
2. Temporary business signs shall be subject to the following requirements:
   a. All signs shall be professionally prepared.
   b. Only one (1) sign per business may be displayed at any one time, except on corner lots and through lots, which shall be permitted one sign on each street abutting the property.
   c. Signs shall be placed on the lot on which the business is located, not on any Town or State ROW and shall not block any sight line.
   d. Signs may be displayed for up to fourteen (14) days per occasion and must be removed by the close of business of the last day. A minimum of fourteen (14) days must elapse before that business may again display a temporary business sign.
   e. Freestanding signs must be constructed of rigid material and may not exceed 8.5 sq.ft. in size and shall exclude A-frame style signs.
   f. Wall mounted banners must be constructed of fabric or plastic material and their size shall not exceed one (1) square foot for each lineal foot of the building where the primary entrances and/or display windows are located; maximum 40 sq.ft.
      1. In a mixed-use or multi-tenant building, the total banner area permitted for each business shall be pro-rated on an equitable basis, such as the building face for that tenant.
      2. The maximum size of all banners on a building shall not exceed 40 sq.ft.
   g. Signs shall not be illuminated.
   h. Temporary business signs shall not be permitted in R, RU or RM zoning districts.
   i. The applicant must register prior to the placement of a temporary business sign. Any business that violates any of the requirements of Subsection (2) of these regulations regarding temporary signs shall not be granted a temporary permit registration for one (1) year following the date the violations is recorded.

3. In the TC zone, window signs may also be used in place of other

temporary advertising signage allowed by this section. Permitted temporary window signs may be registered in addition to window signs permitted by Section 6.9.B.24, subject to: *06/09/14*

a. Temporary window signs registered per his section shall not occupy more than 25% of the area of any individual window, as defined by separating framework, including glass portions of doors/entryways
b. Any window signage shall be displayed/located only in windows/glass doorways/glass entryways that are part of the space occupied by the entity that is displaying the signage, or common space that includes the entity that is displaying the signage

D. Signs requiring a permit:

1. Signs permitted in residential and rural zones:
   a. Identification of farms, truck gardens, nurseries, churches, places of worship, parish halls, schools, colleges, universities, museums, hospitals, cemeteries; educational, religious, philanthropic, scientific, literary, historical and charitable institutions, agricultural and horticultural societies; parks, playgrounds, campgrounds, historical landmarks and similar uses; one sign per 25 acres, not exceeding 12 square feet per sign nor height of 8 feet. A use with less than 25 acres shall be allowed 1 sign.
   b. Identification of an approved residential subdivision: One sign per 25 acres, not exceeding 12 square feet per sign. A subdivision with less than 25 acres shall be allowed 1 sign.
2. Signs permitted in multi-family zones and Open Space Planned Residential Districts:
   a. One ground or wall sign not to exceed 25 square feet at the main entrance to a multi-family complex.
   b. One ground or wall sign not to exceed 3 square feet at all secondary entrances to a multi-family complex.
3. Signs permitted in limited business zones:
   a. One ground sign or wall sign not to exceed 10 square feet in area nor 6 feet in height.
4. Signs permitted in TC,CA, CB, DD, RF and I zones: *08/17/18 05/18/97*
   a. Business signs, including wall, roof, ground, hanging, interior and marquee, advertising a business or businesses located on the premises, subject to the following requirements:
      1. The total aggregate surface area of all business signs on a lot shall not exceed 1 square foot for each lineal foot of the building where the primary entrances and/or display windows are located.
      2. In a mixed-use or multi-tenant building, the total sign area for said building shall be pro-rated on an equitable basis, such as the building face for that tenant.
      3. Each business use or tenant shall be permitted 1 additional wall identification sign at a secondary business entrance facing a parking lot, not to exceed 2 square feet. Such sign shall be exempt from the total allowable sign area.
      4. In a mixed-use or multi-tenant building, a business use which is unable to have any business sign because existing uses are utilizing all allowable sign area with legally erected signs, shall be allowed a maximum 8 square foot wall or hanging sign.
      5. The area of all ground signs on the site shall be deducted from the total allowed sign area for the property.
   c. In the case of a shopping center having a floor area in excess of 40,000 square feet with buildings set back more than 150 feet from

the streetline, the following ground sign standard shall apply.

1. A ground sign for the purpose of identifying the shopping center complex and/or its tenants, located at the main entrance may be 100 square feet in area.
2. If a center has more than one entrance, a second ground sign of 50 square feet in area shall be permitted.
3. The area of all ground signs on the site shall be deducted from total sign area allowed for the property.

d. In the case of industrial, office or mixed-use parks having an excess of 20 acres and capable of supporting 3 principal buildings and 3 tenants, these additional signs are permitted:

1. A ground sign for the purpose of identifying the park, located at the main 10 feet.
2. If a park has more than one entrance, a second ground sign of 50 square feet in area shall be permitted.
3. These signs shall be in addition to any business ground signs permitted by these regulations.

e. Identification of farms, truck gardens, nurseries, churches, places of worship, parish halls, schools, colleges, universities, museums, hospitals, cemeteries, historical and charitable institutions, agricultural and horticultural, assisted living facilities, societies, parks, 1 sign per 25 acres not to exceed 12 square feet in area per sign. A use with less than 25 acres shall be allowed 1 not to exceed 12 square feet in area.

f. Advertising signs (billboards) per standards in §6.9E. *08/16/19*

g. In case of a theatre for dramatic or musical productions as specified in §4.11.C.5, the following standards shall apply: *02/16/02*

1. The total aggregate surface area of all signs on a lot shall not exceed .667 of 1 square foot for each theatre seat.
2. The following types of signs, as defined in these regulations, shall be permitted: Wall, ground, hanging, marquee, temporary, advertising signs and sandwich board signs.
3. Advertising signs shall be permitted.
4. One rotating ground sign containing maximum per face area of not more than 40 square feet shall be permitted if located a minimum of 300 feet from any property line.
5. The following limitations shall apply:
   a. Any exterior wall sign shall not exceed 75 feet in height measured from ground level; the total aggregate surface area of all exterior wall signs shall not exceed 1600 square feet.
   b. Banners shall be permitted where attached to a parking area light pole provided none shall exceed 15 square feet in area and shall not be located within 75 feet of a public roadway.
   c. The total aggregate surface area of all ground signs shall not exceed 250 square feet.
   d. The total aggregate surface area of all non-exempt directional signs shall not exceed 300 square feet.
   e. Sandwich board ground signs shall be permitted during events for traffic directional purposes.

h. In the case of a business located in the TC zone, the following additional standards shall apply: *08/17/18*

1. One hanging sign per business shall be permitted, subject to the following:

a. Illumination of hanging signs shall only be provided by down-lighting from a gooseneck type fixture.
b. This hanging sign shall be in addition to any signs permitted under §6.9.C.4.
c. Signs shall only be erected after approval by a recognized, non-profit "Revitalization/Beautification Association".
d. Limited to 6 sq.ft.

2. Store identification banners hanging off of downtown light poles erected by a recognized, non-profit Revitalization/Beautification Association" shall be permitted, subject to the following conditions:
   a. The maximum size per banner shall be 1 ft. X 4 ft.
   b. The banners shall be secured at top and bottom so they are rigid.
   c. The banner shall be limited to two (2) per utility pole.
   d. These signs shall be in addition to sighs permitted under §6.9.C.4
3. All new signs shall be naturally illuminated or illuminated by external light sources installed in a manner that shall prevent light from shining onto any street or adjacent property.

i. In the case of vehicle fueling/charging stations, the permitted ground signage may include up to a total of two (2) digital sign displays, each area not to exceed 10 inches in height and 25 inches in width. Such signage shall count toward and be a part of permitted signage on the site, including, but not limited to, permitted number of ground signs, total permitted ground signage, and total permitted signage on the site. Such signage shall allow comply with the following: *08/16/19*
   1. Shall not change more than once in a 24 hour time period, and shall not otherwise move, scroll, flash, blink, change colors, or otherwise utilize special effects;
   2. The background for such signage shall be black;
   3. The NIT intensity shall be no greater than 5,000 NITs during daylight hours and 3,000 NITs during the evening hours. As required by the Planning and Zoning Commission, Zoning Enforcement Officer, or Town Engineer, the owner or operator of the sign shall provide verification of compliance with this requirement.

5. Signs permitted in the IX District and Interchange District:
   a. Business signs, including wall, roof and ground signs advertising a business or businesses located on the premises, subject to the following requirements:
      1. The total aggregate surface area of all business signs on a lot shall not exceed one-half square foot for each lineal foot of the face of the building where the primary entrances and/or display windows are located.
      2. In a mixed-use or multi-tenant building, the total sign area for said building shall be pro-rated on an equitable basis, such as the building face occupied by each tenant.
      3. Each tenant shall be permitted one additional wall identification sign located at a secondary business entrance facing a parking lot. Said identification

sign shall not exceed 2 square feet in area and shall be exempt from the total allowable sign area.

4. The area of all ground signs on the site shall be deducted from the total allowed sign area for the property.

b. In the case of an industrial or office park, having an excess of 20 acres and capable of supporting 3 principal buildings and 3 tenants, these additional signs shall be permitted.

1. One ground sign for the purpose of identifying the park, located at the main entrance not to exceed 100 square feet in area or a height of 10 feet.
2. If a park has more than one entrance, a second ground sign of 50 square feet in area shall be permitted.
3. Directional signs for businesses or buildings within the park not exceeding 6 inches by 36 inches each, to be places only at points approved by the Town Police Traffic Division.
4. These signs shall be in additions to any business ground signs permitted elsewhere by these regulations.

E. Standard Applying to All Signs

1. Non-conforming Signs
   a. A legal, non-conforming sign may not be enlarged. The sign may be re-lettered, sign face changed, the frame or pylon/pole replaced, but once the sign and/or supporting structure is removed for purposes other than alteration or immediate replacement, it shall be deemed permanently removed and may be replaced only in accordance with the provisions of this section.
2. Illuminated Signs
   a. Exterior illumination is permitted when confined or directed to the surface of the sign so that no direct rays or glare are visible beyond the property lines or create a danger to vehicular traffic.
   b. Up-lighting is prohibited.
3. Advertising Signs
   a. Advertising signs are prohibited in all designated local, state or federal historic districts.
   b. Advertising signs shall:
      1. Be limited to 1 per lot provided that the lot has a minimum of 100 feet in width along the streetline.
      2. May contain 2 signs per facing, providing the facings are back to back or V-shaped.
      3. Shall not exceed a length of 30 feet per facing.
      4. Shall not exceed a height of 20 feet above grade.
      5. Shall not be permitted to project into a required front yard. No part of an attached sign other than illuminating apparatus shall project more than 18 inches into a required sideyard.
      6. Shall not be permitted on a lot which has a ground sign.
      7. Shall be a minimum of 100) square feet in area.
      8. Shall require Site Plan approval.
4. Ground Signs
   a. A ground sign shall be supported by a free-standing, self-supporting structure that is erected on the ground and is not

attached to a building.

b. No ground sign shall exceed a height of 20 feet as measured from the ground to the top of the sign.

c. No ground sign shall exceed a total surface area of 64 square feet except for a shopping center or industrial or office park.

d. No ground sign shall be located within 50 feet of the boundary of a residentially zoned property.

e. All ground signs shall be at least 10 feet from any property line.

f. Only 1 ground sign shall be permitted per lot, except for industrial, office, mixed-use parks and shopping centers.

5. Marquee Signs

a. Signs shall not be permitted on any marquee, other than signs built into and forming a part of the structure of the marquee. Such signs shall not extend beyond the edge of the marquee.

6. Wall Signs

a. Except as permitted by § 6.9.E.6.b and §6.9.E.6.c, wall signs shall be attached to the face of the building in a place parallel and flush to such face, but shall not extend or project more than 12 inches from the building and shall not extend higher than the parapet in the case of a one-story building; and in the case of other buildings, they shall not extend above the sill of the windows of the second story. In no case shall any wall sign extend more than 15 feet above the mean finished grade.

6/19/10, 3/3/13, 7/18/15

b. Wall signs in the IX District shall not be higher than forty-five feet (45') above the mean finished grade of the building.

4/1/13, 7/18/15

c. In I-40, I-20, Interchange District (I-5), and RF-40 zones, signs shall not extend higher than the approved building structure not including height exceptions made in §6.1B & §6.1C of these regulations; signage on a parapet shall not extend more than five (5) feet above the adjacent roof line.

8/18/14, 7/18/15

7. Hanging or Projecting Signs

a. A hanging or projecting sign shall project not more than 36 inches over a public walkway and shall not exceed 6 square feet per face in area. The construction and method of securing such signs to the structure shall be approved by the ZEO. The bottom of such sign shall be at least 8 feet or a maximum of 12 feet above the sidewalk and shall not extend into any area which is accessible to service or emergency vehicles.

8. Roof Signs

a. Roof signs shall be prohibited, except in the case of a one-story building having a pitched roof, when the roof extends to less than 1 foot above the door and windows, for the length of the building frontage, a sign on the roof and parallel to the roof shall be permitted. The sign shall not project more than 12 inches from the roof. The top of the sign shall be located on the lower half of the roof, and in no case shall the sign extend more than 15 feet above the outside grade.

F. Prohibited Signs

The following signs are prohibited in any district:

1. Any moving sign or device designed to attract attention, including fluttering or rotating devices (such as, but not limited to, pennants, balloons, flags, propellers, discs, etc.)provided, however, that moving signs associated with the opening of a new establishment may be permitted for a period not exceeding 15 days.
2. Any flashing sign or device with flashing or intermittent lights of changing degrees of intensity, or neon illumination or other similar exposed unshielded illumination. *08/16/19*
3. Digital Signs, Light-Emitting Diode (LED) strips, and any other signs which involve the electronic or automatic switching of lamps or illuminated tubes, except as expressly permitted in these regulations. *08/16/19*
4. Any portable sign, including any sign displayed on a vehicle when such vehicle is used primarily for the purpose of such display.
5. Any sign mounted or posted on any tree or utility pole.
6. All signs not expressly permitted by these regulations.

G. LED/Electronic Sign Moratorium *02/17/17*

1. In developing the current regulations regarding signage, the potential for light-emitting diode (LED)/electronic message technology was not anticipated and therefore not accounted for, particularly in regard to brightness and illumination.
2. Illumination of signs is otherwise currently regulated by Section 6.9 of the Regulations.
3. Levels of illumination and glare, particularly at night time, as well as movement of signs is of particular concern to the Commission in regard to creation of distractions and public safety hazards, as well as light intrusion onto other properties.
4. LED/Electronic signs are particularly designed to allow for motion, which is not currently permitted by the Regulations.
5. LED/Electronic signs make it particularly easy to advertise off-premise businesses/items, which is not currently permitted by the Regulations, except in the case of permitted "off-site advertising signs" (billboards).
6. For nine (9) months following the effective date of this regulation, a moratorium on applications seeking to obtain approval for, or installation of, any light-emitting diode (LED) and/or other electronic signage is prohibited. This moratorium shall be in effect in order to provide the Commission sufficient time to: determine whether such signage is appropriate to the public health, safety, and welfare of the Town of Wallingford; to determine what, if any, amendments to the Regulations are appropriate in regard to LED/Electronic signage; and to, if deemed appropriate, enact regulations regarding such signage.
7. This moratorium shall not apply to signage that is displayed inside a building, as this signage is not regulated by these Regulations.
8. This moratorium is effective on February 17, 2017.
9. Effective November 17, 2017, the length of the moratorium as described in Section 6.9.G.6 above shall be extended an additional 6 months, such that this moratorium shall be effective for a total of 24 months following the original effective date of February 17, 2017. *08/17/18*
10. Effective February 17, 2019, the length of the moratorium as described above shall be extended an addition 6 months, such that this moratorium shall be effective for a total of 30 months following the original effective date of February 17, 2017, with an expiration date of August 17, 2019. *02/17/19*

§6.10 EXCAVATION AND FILLING OF LAND *05/17/88*

The excavation of land, stockpiling of earth products on a site, creation of ponds, and/or filling of land with earth products such as, but not limited to: topsoil, loam, sand, gravel, clay, stone or minerals shall be permitted in any zoning district subject to a Special Permit in accordance with §7.5.

A. Application for a permit under this section shall be submitted in writing to the Commission. The application shall be accompanied by maps and plans prepared by and bearing the seal of a licensed land surveyor or civil engineer showing the following: *10/02/94*

1. Key map, at a scale of 1"=1000'.
2. The location and exterior limits of the area to be filled, excavated or graded.
3. Property lines and streets adjoining the lot, location of buildings and structure on adjoining parcels and the names addresses of owners of property adjoining the lot.
4. Existing and proposed contour lines on the lot to be filled, excavated or graded, coordinated to a permanent monument, drawn to a scale of not more than 100 feet to the inch and with a contour interval not exceeding two feet.
5. Existing and proposed drainage on the lot and existing rivers, streams, watercourses, ponds, swamps, and wetlands within 200 feet of the lot. If off-site information is not readily obtainable by survey, such information may be supplied from U.S.G.S. datum.
6. The location on the lot of any wooded area, rock out-crops and existing and proposed buildings and structures.
7. An estimate of the number of cubic yards of material to be filled, excavated, graded or removed and an estimate of the time necessary to complete the operation.
8. Proposed vehicular access to the lot and proposed work roadway.
9. An estimate of the number, types and hours of operation of trucks and other machinery to be used on the site, and the locations and types of any buildings, including temporary buildings to be erected.
10. Details of proposed blasting and storing of explosives.
11. Details of final grading and planting of the site to prevent erosion on the site both during the operation and at its conclusion.
12. Sedimentation and erosion control plan.
13. The quantity, type, and length of time any earth products will be stockpiled on the site.

B. Standards

The proposed excavation or filling project shall conform to the following standards:

1. The premises shall be excavated and graded in conformity with the proposed contour plans, as approved.
2. No processing machinery shall be erected or maintained on the lot within 200 feet of any property or street line, and any such machinery shall be removed from the lot upon termination of the permit. No materials shall be stockpiled and no equipment or structures covered by the permit shall be operated or located outside the permit area. Except in an industrial district, no screening, sifting, washing, crushing or other forms of processing shall be conducted upon the premises. No other machinery, not required for the operation, shall be

on the site.

3. The work shall be limited to the hours of 7:00 A.M. to 7:00 P.M. Monday through Friday, except in industrial zones, where it is limited to Monday through Saturday, 7:00 A.M. to 7:00 P.M. No work shall be permitted on legal holidays. The above time limitation may be waived by the Commission, or its authorized agents, in the case of an emergency or for the purpose of sanding highways during winter storms.
4. Proper measures shall be taken to minimize nuisance from noise and dust. The access road shall be provided with a dustless surface.
5. At all stages of the work, proper drainage shall be so arranged as to minimize traffic hazards on streets and to avoid nuisance to residents of the neighborhood. In addition, the traffic pattern to and from the operation shall not create a safety or traffic hazard.
6. Such barricades or fences shall be erected as are necessary for the protection of pedestrians and vehicles.
7. There shall be no sharp declivities, pits or depressions.
8. At all stages of the work where any excavation or fill shall have a depth of 10 feet or more and create a slope of more than one foot vertical to two feet horizontal distance, there shall be a substantial fence enclosing the fill or excavation, at least six feet in height with suitable gates. Such fence shall be located 50 feet or more from the edge of the excavation or fill.

C. Restoration Plan

Upon completion of the work authorized, the area of excavation or otherwise disturbed ground shall be prepared or restored as follows:

1. Such area shall be evenly graded to slopes not exceeding one foot of vertical rise to three feet horizontal distance. The required slope may be modified by the Commission where ledge rock makes steeper slopes unavoidable or to such lesser slopes as is necessary for soil stability, safety and reasonable reuse and development of the lot. In addition, the area shall grade with sufficient slopes, dikes, berms and waterways to assure adequate drainage of the area, so that stagnant pools of water shall be avoided and so that the adjacent area shall not be damaged.
2. All debris and all loose boulders not incorporated into the improvement of the lot shall be buried or removed from the lot.
3. A top layer of any arable soil, which shall be free of any large stones, shall be spread to a depth of not less than six inches over the entire area, and the area shall then be seeded with a perennial grass and maintained until the ground shall be completely stabilized with a dense cover of grass and there exists no danger from erosion, but this provision shall not apply to the area of ponds, nor to exposed areas of ledge rock existing prior to excavation.

D. Considerations Affecting Approval

In reviewing all plans, the Commission shall take into consideration the public health, safety and welfare, the general objectives of Site Plan Review and the following specific considerations:

1. The Commission shall consider the location, intensity and type of operation contemplated in each application. The Commission may impose conditions for safety of operations and to prevent

damage to adjacent lands or improvements, including the specifications of appropriate performance standards.

2. Filling with and/or removing earth products shall be restricted to areas which have access to roads of sufficient width and capacity to carry maximum projected loads. When alternate routes are available, such traffic shall avoid routes which require passage through residential areas.
3. Location shall be avoided where it is anticipated that the activity may cause slides, sinking, collapse of supporting soil, erosion by wind or water, water pollution, undue alteration of the water table of adjoining properties or any other deleterious effects.
4. Activities shall also be reviewed with respect to the condition of the site after completion of the operation and the relationship of that site to existing and permitted development in the general area in which the site is located. The applicant's proposed Restoration Plan for the site shall demonstrate the extent to which the site can, and reliably will, be restored to condition, and shall facilitate the development of the general area.

   For this purpose, the Commission shall exercise judgment as warranted by the circumstances of each case to impose conditions including but not limited to:

   a. Grading and landscaping requirements.
   b. Limitation on the months of the year, days of the week, and hours of the day during which any work may be performed on the premises.
   c. Limitations as to the size and type of machinery used on the premises.
   d. Place and manner of disposal of excavated material, and/or source and variety of fill materials to be brought onto the premises.
   e. Requirements for the control of dust, noise, fumes and lighting.

E. Exceptions

1. Excavation or filling of earth products in connection with and clearly essential to the construction or alteration of a building or structure on the same premises, provided a (driveway, sewer, health, wetland, zoning or building) permit has been issued for such construction or alteration, and such work is specified in said permit.
2. Construction, grading or changing of contours in accordance with plans for the same that have been approved by the Commission, covering the roads, lots and other improvements in an approved subdivision. Any excavation or filling beyond the limits shown in the approved plan of the Commission's action shall require a permit as outlined in this section.
3. The construction of a swimming pool or underground shelter for which a Zoning Permit has been issued, or a wall, driveway, fence or other special appurtenances to the use of land in question or the placement of utility lines or services. Incidental filling, grading or excavating in connection with maintenance, repairs, or minor improvements to property or customary landscaping shall be exempt from permit requirements.
4. Any filling, excavation, grading or removal involving the movement on any lot of no more than l00 cubic yards of earthen material.

F. Regulations Regarding Permit

Any permit issued hereunder shall expire one year from the date of publication of notice of approval unless renewed by the Commission.

1. Permit Renewal - The Commission may renew its permission to carry out excavation and removal, stockpiling, re-grading or filling for periods of one year without a public hearing provided the applicant submits an updated map showing existing conditions, and shows through the report of a Registered Professional Engineer or Registered Land Surveyor, that the operation as approved and that the other applicable requirements of this section have been carried out.
2. Inspection - The Commission, or its authorized agents, shall, at all times, have access to the premises for the purpose of inspection and determination of compliance with this section. The Commission may require the applicant to submit periodic reports, prepared by and bearing the seal of a Registered Land Surveyor or Registered Civil Engineer, showing the status and process of the work.
3. Posting of Bond - Before a permit shall be granted under this section, the applicant shall file with the Commission a bond in accordance with §8.10.
4. Release of Bond - Upon completion of work authorized by a permit and the restoration of the site pursuant to subsection "Restoration" above, the applicant may apply to the Commission for release of the bond filed, and upon receipt of a letter from the Town Engineer stating that the work and restoration have been completed as required by the permit and these regulations, the bond shall be released by the Commission to the permit holder.
5. Existing Operations - Any operation involving the filling, excavation, grading or removal of earthen material which is in existence and has an overall approval on the effective date of these regulations or any amendments thereof shall be allowed to complete all operations in accordance with the overall approval within a reasonable period of time as determined by the Commission.

G. Limited Special Permit for Stockpiling of Earth Products

The Commission may issue a Limited Special Permit for Stockpiling, authorizing the applicant to store or stockpile earth products for as long as the conditions of the Permit are complied with.

1. Applicable Standards and Rules. A Limited Special Permit for Stockpiling shall be issued in accordance with §7.5 of these Regulations (Special Permit) and with subsections (A) and (D) of this §6.10 (Application Requirements and Considerations Affecting Approval), except that where the stockpiling is undertaken as part of the temporary storage or re-handling of products manufactured on another site so as to prepare a grade, style, type or mix different from the products being stockpiled, the information on the application concerning location of uses need only state the type of earth products being stockpiled and an estimated maximum quantity of such products to be stockpiled at any one time. If this estimate is based on past practice at the site, an amendment necessitated by changed conditions may be made in accordance with the minor amendments procedure of §7.5.G.
2. Compliance. Activities on a lot on which stockpiling is permitted under the Limited Special Permit for Stockpiling may be inspected at

any time by the Commission or its authorized agents in order to determine compliance with the terms of such Permit. As a condition for the issuance of the Limited Special Permit for Stockpiling, the Commission may require the applicant to submit periodic reports showing the location and size of stockpiles at stated periodic intervals.

3. Duration. A Limited Special Permit for Stockpiling may be revoked by the Commission if it finds, after a hearing before the Commission, that a condition or safeguard imposed by the Commission upon activities authorized by such Permit has not been adhered to in all significant respects and that, after notice from the Commission, the alleged violation has not been corrected by the permittee. The permittee shall be given a reasonable period of time in which to correct an alleged violation prior to any hearing held

§6.11 OFF-STREET PARKING AND LOADING FACILITIES

A. Parking facilities required - On all premises developed, expanded or changed in use after the adoption of these regulations for any purpose, parking facilities shall be provided off the street or highway right-of-way, sufficient to accommodate the vehicles of all occupants, employees, customers and other persons normally visiting the premises at any one time.

B. Location of facilities - Required parking facilities shall be provided on the same lot as the building they serve, except as provided elsewhere in these regulations. Two or more parking facilities on adjoining lots, if designed for use as a single parking area, may use the same means of access. In single-family residential districts, no parking shall be allowed in front yards, except on driveways or on turn-arounds in side yards.

C. Required minimum parking area - Parking facilities shall contain space for vehicles in accordance with the following table. Parking shall not infringe on driveways needed for access except in the case of a single or two-family dwelling unit. Parking areas shall be landscaped in accordance with the provisions of §6.14.E. *02/17/17*

Type of Use	**Number of Car Spaces**
Single-family dwelling unit	2 spaces
Two-family dwelling unit	4 spaces
Three-family dwelling unit	6 spaces *05/19/91*
Multi-family dwelling units	
Studio or 1-bedroom unit	1.75 spaces per unit
2-bedroom unit	2.25 spaces per unit
3-or more bedroom unit	2.50 spaces per unit
Public housing for the elderly	1 space per unit
Offices, financial institutions	1 space for each 250 square feet GFA
Medical, dental offices, clinics and laboratories	1 space for each 150 square GFA
Permitted home occupations	3 spaces or equal to twice GFA used for such purpose, whichever number of spaces is greater
Retail stores, personal service shops	1 space for each 250 square feet of GFA
Restaurants, nightclubs, taverns, pubs, with or without provisions for a dance floor	1 space for each 75 square feet of customer seating, standing or dancing area. *12/18/20*
Hotels, motels	1 space for each unit, 1 space for each 75 square feet of GFA of restaurants or banquet area, 1 space for each 50 square feet of GFA of

	nightclub or lounge area
Boarding Houses	1 space for each boarder
Bed and Breakfast	2 spaces for the owner-occupant 1 space per guest bedroom used in the operation of the bed and breakfast
Theaters, churches and assembly halls having fixed seats	1 space for each 3 seats
Bowling alleys	5 spaces for each alley
Assembly halls and other places of assembly not having fixed seats	1 space for each 50 square feet of GFA
Hospital, sanitariums, nursing homes	1 space for every 4 beds plus 1 space for every 3 persons employed at one time
Automobile repair shops, garages and gas stations	5 spaces per bay plus 1 space per employee plus 2 spaces
Manufacturing plants	1 space for every 2 persons employed at any one time but not less than 1 space for each 500 square feet of floor area
Wholesale distributing plants, trucking terminals	1 space for every 2 persons employed at any one time but not less than 1 space for each 1,000 square feet of GFA
Storage warehouses	1 space for every 2 persons employed at any one time but not less than 1 space for each 1,500 square feet of GFA
Pharmaceutical research and development, and specialty chemical application laboratories 12/16/00	1 space for every 1.5 persons employed at one time but not less than 1 space for each 1,000 sq. ft. of GFA
Specialty chemical additives production process	1 space for every person employed at any one time, but not less than 1 space for each 3,500 sq.ft. of GFA *12/16/00*
Research and development, laboratories	1 space for every 2 persons employed at any one time but

	not less than 1 space for each 400 square feet of GFA
Out-patient Surgical Centers	l space for each 250 square feet of GFA *12/19/92*
Other uses not listed above	Parking facilities as determined By the Commission

D. Common Parking - The Commission may reduce the parking requirements by a maximum of 50 percent for churches and other places of worship, places of public assembly, theaters, non-profit clubs, bowling alleys, cafes, taverns, restaurants, night clubs, and other similar uses where such uses will be generating a demand for parking during periods when other uses are not in operation subject to the following conditions:

1. The applicant shall demonstrate that there is no substantial conflict in the operating hours of the two buildings or uses for which joint parking facilities are proposed and that additional parking on the street will not occur.
2. The Commission may require such documentation, as necessary, to assure that parking to be used jointly and not located on the applicant's property, does not reduce the non-applicant's required parking and shall be legally available for use by the applicant.

E. Joint use of Space - Required parking spaces or required loading spaces, open or enclosed, may be provided in spaces designated to serve jointly two or more establishments whether or not located on the same lot, provided that the number of maximum required spaces in such joint facilities shall not be less than the total required each such establishment at the required time, and that the parking area, or a major portion thereof, shall be located within 500 feet of the use it serves.

F. Truck Loading Space - Each hospital, retail store, institution, restaurants, warehouse, hotel, motel, wholesale business, research laboratory, manufacturing, processing or assembling facility, distribution facility, or contractor's business, shall provide off-street loading space on the same lot as the principal building or structure, in accordance with the following minimum standards:

a.	0 to 3,999 s.f. of GFA	0 loading space
b.	4,000-24,999 s.f. of GFA	1 loading space
c.	25,000-49,000 s.f. of GFA	2 loading spaces
d.	Each additional 25,000 s.f.of GFA	1 additional loading space

1. The Commission may require off-street loading spaces for other uses not listed above. They shall be guided by the nature of the use.
2. Each loading space shall be provided with adequate area for approach, turning and exit of the vehicle for which it was designed without need to use any part of a public right-of-way. No off-street loading space shall be designed or arranged in a manner that requires vehicles to use any part of a public street right-of-way to back into such space, nor shall it be designed in such a way as to necessitate backing into a public street right-of-way.
3. No loading space or access thereto shall encroach on any part of an access drive or parking aisle. *10/02/94*

4. No loading space or access thereto shall be located less than 20 feet from any property line or street line.

G. Design Standards

1. All off-street parking and loading areas shall be suitably improved, graded, stabilized and maintained so as to cause no nuisance or danger from such area or from surface water flow. No such area shall have a slope of less that one-half percent nor greater than three percent. All parking areas and loading areas shall have a dustless surface. All parking spaces shall be defined by painted lines and/or wheel stops.
2. No entrance or exit for any accessory off-street parking area with more than 10 parking spaces shall be located within 50 feet of the intersection of any two street lines.
3. Any lighting used to illuminate any required off-street parking or loading area shall be so arranged that the illuminated areas shall be confined essentially to the property where it originated. The maximum height of such lighting shall be 14 feet in residential districts and 25 feet in all other districts.
4. Parking lots containing 40 or more parking spaces shall incorporate a loop circulation system to permit drivers to exit the parking area without the need for U-turns.

H. Fire lanes shall be provided on a site where required by the Fire Marshal. Such designated fire lanes shall be at least eight feet in width and shall be marked "No Parking". No required parking or loading space shall encroach on any required fire lane.

6. All driveways shall be provided with paved aprons starting at the property line and ending at the gutter or street face of the curb lines and shall conform to the standard specifications for driveways as shown on Drawing No. AA-257 of the Town Department of Engineering. (See illustration)
7. Long Driveway Standards *01/01/13*
   1. Specifications – Driveways exceeding 100 feet in length shall be constructed in accordance with the following standards:
      a. Width: Driveways shall not be less than twelve (12) feet in clear width
      b. Vertical Clearance: Driveways shall be unobstructed to a minimum height of 13’6”
      c. Maximum allowed grade shall not exceed 15%
      d. Angles of approach and departure shall not exceed one (1) foot drop in 20 feet
      e. Driveways, bridges, culverts, etc. shall be made of materials approved by the Fire Marshal, Fire Chief or their designee and capable of supporting vehicles in excess of 75,000 pound gross vehicle weight under any weather conditions
      f. Driveways shall be constructed and maintained in such a manner that there is minimal potential for erosion
   2. Driveways exceeding 200 feet in length, in addition to the Specifications above, shall also be provided with a two (2) foot clear zone on each side of the driveway and a turn-around in compliance with the illustrations in Section 2.3.I
   3. Alternate safeguards may be accepted by the Fire Marshal and/or Fire Chief
8. No driveway shall provide the principal access to more than 2 lots *12/15/01*

H. For all uses required to provide handicapped parking, space shall be provided at the rate: *10/02/94*

Total Parking	**Number of Spaces**
Up to 25	1
25 to 50	2
51 to 75	3
76 to 100	4
101 to 150	5
151 to 200	6
201 to 300	7
301 to 400	8
401 to 500	9
501 to 1000	2% of total
Over 1000	20 plus 1 for each 100 spaces over 1000

I. **TRIP GENERATION TABLE**

USE	**PEAK HOUR TRIPS**
Auto sales	4.6/1,000 sq.ft.
Bank	27.3/1,000 sq.ft.
Business & Professional Offices	2.36/1,000 sq.ft.
Church	.6/1,000 sq.ft. (8.4/1,000 sq.ft. Sunday)
Convenience Market	71.7/1,000 sq.ft.
Fast Food Restaurant	33.3/1,000 sq.ft.
Grocery Store	8.8/1,000 sq.ft.
Hotel, Motel	.6/room
Light Industry	1.0/1,000 sq.ft. *01/30/90*
Manufacturing, assembling, processing, packaging	.7/1,000 sq.ft.
Medical Clinic	1.1/employees
Medical Office	3.6/1,000 sq.ft.
Movie Theater	.3/seat
Multi-family dwelling unit	.6/unit
Recreational	31.5/acre
Research Center	1.0/1,000 sq.ft.
Restaurant with waitress service	13.6/1,000 sq.ft.
Retail Store	11.3/1,000 sq.ft.
Service station	3.6/pump
Single family dwelling unit	1.0/unit
Warehousing	1.6/1,000 sq.ft.
Other uses not listed	As determined by the Commission using the most recent edition of Trip Generation, ITE as a guide.

§6.12 OUTSIDE STORAGE

A. Outside storage, including storage of merchandise, supplies, machinery and other materials shall be allowed only in commercial, design, industrial, industrial expansion, and the Route 5 districts. Outside storage areas shall not extend into the area required for setback from a street line or into the required sidelines adjacent to a residential, multi-family, rural, or limited business district. Outside storage areas shall be enclosed by buildings, fences, walls, landscaped earthen berms, or evergreen shrubs or trees, so as to screen the storage area from view from any other lot or from any street. Such screening shall not apply to areas for the parking of registered motor vehicles in daily use or the parking of new or used motor vehicles, heavy equipment, farm equipment, or boats on bonafide sales lots. *10/02/94 05/18/97*

B. Metal Containers

Metals containers and trailers for storage purposes are permitted in CB, I, and RF zones subject to the following conditions: *05/18/97 12/15/91*

1. Such containers shall be located in rear yards and shall comply with the standard rear and side yard building setbacks for the district. In addition, the coverage area of such containers in conjunction with the coverage area of permanent structures shall not exceed the overall building maximum coverage percentage of the zone in which the property is located.
2. Metal containers and trailers shall be screened from any streetline by buildings, fences, walls, landscaped berms or evergreen shrubs and trees. In addition, on portions of properties adjacent to any zone other than CB,I or RF zones, such containers shall also be screened by means of walls, berms, fences or evergreen plantings from properties in other zones. *05/18/97*
3. Such containers may not be placed in such a manner as to reduce the number of available parking spaces on the property to less than that required by §6.11.C.
4. Such containers may not be placed on vacant lots or any property without a permanent structure.

C. Trucks, Trailers and Construction Equipment *12/15/91*

1. In residential zones, the storage of one commercial vehicle per lot of a capacity not in excess of one ton which is owned or operated by the owner or occupant of the residential dwelling is permitted.
2. No construction equipment or vehicle of more than one-ton capacity shall be allowed to habitually park or to be stored overnight in any residential or limited business district.
3. No trailer of any size used for commercial transportation of goods or equipment may be habitually parked or stored overnight in any residential or limited business area.
4. The sale of merchandise from a tractor-trailer or truck shall be permitted in a business or industrial zone and only as an accessory use, after the issuance of a Zoning Permit, for a period not exceeding two months.
5. No tractor-trailer, nor the tractor or trailer unit thereof, shall be parked in a residential district at any time except in connection with a moving operation.

6. Provisions of this section do not apply to vehicles, trailers, or equipment used on a farm or other agricultural operation.

D. Boats and Campers

1. No boat, bus or self-contained camper-type vehicle larger than 20 feet in length but less than 30 feet in length, shall be parked in a front yard in a residential, rural, multi-family or limited business district, from the first day of October to the 30th day of April. It may be parked in a side or rear yard if it is properly screened from view from any other lot or from any street.
2. No boat, bus, or self-contained camper-type vehicle, larger than 30 feet in length, shall be parked in any residential, rural, multi-family, or limited business district, unless it is stored in a building.
3. Provisions 1 and 2 above shall not apply to the temporary parking of a camper-type vehicle for up to two weeks, which is owned by individuals visiting the residents of the lot on which it is parked.

E. Dumpsters, Refuse and Recycling Containers

1. In residential and LB zones, such containers shall be located in rear yards and shall comply with the standard rear and sideyard building setbacks for the district.. *03/14/09*
2. In commercial, industrial and Tracy zones, such containers shall be located only in rear and sideyards. *03/14/09*
3. Dumpsters, refuse and recycling containers shall be screened from any streetline or other property line by means of walls, fences, buildings or evergreen shrubs and trees.
4. Such containers may not be placed in such a manner as to reduce the number of available parking spaces on the property to less than that required by §6.11.C.
5. Such containers may not be placed on vacant lots or any property without a permanent structure. *12/15/91*

§6.13 NON-CONFORMING USES, BUILDINGS AND LOTS

Purpose – A non-conforming use, structure or lot is one which existed lawfully, whether by variance or otherwise, on the date these zoning regulations or any amendment thereto became effective and which fails to conform to one or more of the applicable zoning regulations of these regulations or any amendment thereto.

A. Non-conforming Use

1. A non-conforming use of a building or land legally existing at the time of the adoption of these regulations or of any pertinent amendment thereto may be continued.
2. A non-conforming use of land or buildings shall not be enlarged, extended, or altered except where the result of such change is to reduce or eliminate the non-conformity.
3. No non-conforming use may be changed except to a conforming use or, with a Special Permit, to another non-conforming use no more objectionable in character.
4. No non-conforming use shall, if once changed into a conforming use, be changed back again into a non-conforming use.
5. No non-conforming use of land shall be moved to another part of a lot or outside the lot, and no non-conforming use of a building shall be moved or extended to any other part of the building or structure unless the result of such move is to end the non-conformity.
6. No non-conformity use which has been abandoned shall thereafter be resumed.

B. Non-conforming buildings and structures

1. No building or structure which does not conform to the requirements of these regulations regarding building height limit, percentage of lot coverage and required yards and parking facilities shall be enlarged unless such enlarged portion and its use conforms to the provisions of these regulations regarding building height limit, percentage of lot coverage required yards, use and parking facilities applying to the district in which it is located.
2. Structures failing to meet any requirement of this regulation, including lack of required parking or loading, shall not be enlarged, extended, constructed or reconstructed or altered, if the results would be an increase in non-conformity.
3. Nothing in this section shall permit the reconstruction of a non-conforming structure which has been intentionally taken down unless the new structure complies with all the provisions contained in these regulations, except as per §6.13.I.

C. Non-conforming Lots

1. In any district, notwithstanding limitations imposed by other provisions of these regulations, buildings may be erected on any non-conforming lot provided no contiguous lots are in the same ownership as evidenced by deeds recorded in the Town Land Records prior to the effective date of these regulations, or any amendments whereto which created such non-conforming lots, provided that construction on and

use of each lot shall comply with all other provisions of these regulations.

2. If two or more contiguous lots or combinations of lots or portions of lots in single ownership are of record at the effective date of these regulations, or any amendment thereto, and if all or part of such lots do not meet the requirements for lot frontage, width or area as established by these regulations, or any amendment thereto, the land involved shall be considered to be an undivided lot for the purpose of these regulations, except as provided in Paragraph 3 below and no portion of said undivided lot shall be used or sold as a building lot which does not meet lot frontage, width and area requirements established within these regulations, nor shall any division of a lot be made which leaves any remaining lot with frontage, width or area below the requirements stated within these regulations.
3. Where two or more lots or combinations of lots or portions of lots with continuous frontage are in single ownership as described in Paragraph 2 above and a lawfully erected building containing a primary use is located on such lot or lots, such lots shall be combined in such a way that each primary use is located on a conforming lot and in no case shall any lot be so created or maintained which is non-conforming in area, width, or frontage.

D. Maintenance

1. Nothing in this Section shall be deemed to prevent normal maintenance and repair of any building, or the carrying out, upon issuance of a building permit, of major structural alterations or demolitions necessary in the interest of public safety. In granting such a permit, the Zoning Enforcement Officer shall state the precise reason(s)why such alterations were deemed necessary.

E. Approved Permits

1. Nothing in this section shall require any change in the plans, construction or designated use of a building for which an application has been made and is legally pending before the Commission, ZBA or Building Inspector prior to the adoption of these regulations or of any amendments thereto and which shall be completed within on year of the adoption of the same. *11/02/87*

F. Casualty

1. Nothing in these regulations shall prevent the reconstruction within three years of a building damaged by fire, explosion, accident, an act of God or of public enemy to its condition prior to such damage nor prevent the restoration of walls or structural members. The building shall contain the same or less square footage. A Building Permit shall be received within two years and the building shall be substantially completed within three years.

G. Zoning Permit

1. No non-conforming use, building, or structure shall be constructed, reconstructed, enlarged, extended, altered, moved, changed, maintained, restored, or replaced unless a

Zoning Permit has been issued by the Zoning Enforcement Officer, stating that such use, building or structure is an existing legal non-conforming use, building or structure and that such construction, reconstruction, enlargement, extension, alternation, movement, change, maintenance, restoration or replacement is in compliance with the applicable provisions of this and all other provisions of the Wallingford Zoning Regulations. For all non-residential uses of land or buildings, and for all residential uses requiring more than six off-street parking spaces, a Site Plan review and approval shall be required before a Zoning Permit may be issued.

H. Residential Compatibility

1. The size, height bulk, and appearance of any non-conforming residential use and/or structure which can legally be rebuilt under the provisions this section shall be rebuilt in character with neighboring residential uses.

I. Route 5 District

1. In the Route 5 District only, all permitted uses which are non-conforming structures because of building coverage may be removed, relocated, reconstructed and rebuilt on the same parcel of land to contain up to the same square footage and up to the same building coverage prior to the time they are removed, provided:
   a. The new site and all structures on it shall comply with all of the requirements in these regulations except building coverage.
   b. The reconstructed building shall be substantially complete within one year of the date the demolition permit is issued for any building(s) on the site.
   c. This section shall apply only to those parcels which contain a minimum of 20,000 square feet of building prior to removal of any building(s) on the parcel.

§6.14 LANDSCAPING, SCREENING, AND BUFFER AREAS

A. Purpose - The following standards are intended to enhance the appearance and natural beauty of the Town and to protect property values through preservation and planting of vegetation, screening, and landscaping material. Specifically, these standards are intended to reduce excessive heat, glare, and accumulation of dust; to provide privacy from noise and visual intrusion; and to prevent the erosion of the soil, excessive run-off of drainage water, and the consequent depletion of the ground water table and the pollution of water bodies.

B. General requirements - The following provisions shall apply to any use in all zoning districts:

1. Landscaping, trees, and plants required by these regulations shall be planted in a growing condition according to accepted horticultural practices, and they shall be maintained in a healthy growing condition. Any landscaping, trees, and plants which are in a condition that does not fulfill the intent of these regulations shall be replaced by the property owner during the next planting season for the particular plant material.
2. A screening fence or wall required by these regulations shall be maintained by the property owner in good condition throughout the period of the use of the lot.
3. All landscaping, trees, and planting material adjacent to parking areas, loading areas, or driveways, shall be properly protected by barriers, curbs, or other means from damage by vehicles.
4. To the extent possible, existing trees, vegetation, and unique site features such as stone walls, shall be retained and protected. Existing healthy, mature trees, if properly located, shall be fully credited against the requirements of these regulations.
5. Where lot size and shape or existing structures make it infeasible to comply with the requirements for a front landscaped area or landscaped parking area, the Commission may approve planters, plant boxes or pots containing trees, shrubs and/or flowers to comply with the intent of these regulations.
6. In cases where the edge of the pavement within a public right-of-way does not coincide with the front lot line, the property owner shall landscape the area between the front lot line and the edge of the street pavement.

C. Front landscaped area - A front landscaped area shall be required for all uses in all zoning districts except for the TC zone. The required *08/17/18* landscaped area shall be covered with grass or other ground cover and shall include appropriate trees and shrubs. As a minimum, one shade tree having a caliper of two inches shall be planted within the front landscaped area for each 50 feet or fraction thereof of lot frontage. The purpose of the landscaping is to enhance the appearance of the use on the lot but not to screen the use from view.

1. In all single family residential districts, required front yards, except for the driveway, shall be landscaped with grass or other suitable ground cover, trees, and/or shrubs.
2. In all multi-family developments and non-residential districts, there shall be a landscaped strip equal to at least 50 percent of the required front yard but not less than 10 feet wide, along

and contiguous to the front lot line of the property. There shall also be a landscaped area five feet wide abutting the front of the building.

3. The above requirement may be modified by the Commission to reduce the width of the landscaped strip abutting the streetline if the following requirements are met:
   a. The building and site are laid out in a manner which would make the requirements of §6.14.C.2 impractical.
   b. The total area of the landscaping between the streetline and the building is at least twice what would be achieved by §6.14.C.2 for that particular building.
   c. No loading area shall be allowed in the area required by §6.14.C.2 if modified landscaping is allowed.
   d. The requirement requiring five feet of landscaping abutting the front of the building may be modified by the Commission to eliminate the landscaping strip if the following requirements are met: *10/02/94*
      a. A concrete sidewalk a minimum of four feet in width is built abutting and parallel to the front of the building.
      b. An area(s) of landscaping equivalent to twice the size of the five foot strip is provided in lieu of the five foot strip, either as additional interior landscaping (§6.14.E.1) or as an addition to the front landscaped strip (§6.14.C.2).

D. Buffer area - The purpose of the buffer area is to provide privacy from noise, headlight glare and visual intrusion to residential dwellings. A buffer area shall be required along all boundaries of a non-residential lot abutting any lot in a residential district.

Such buffer area shall comply with at least the following minimum standards:

1. The buffer area shall be located within the boundaries of the subject property within any non-residential district; however, the buffer area may be located on abutting property in a residential district provided:
   a. The owner of all abutting residential properties agree in writing.
   b. Said agreement is recorded on the land records and runs with the land.
2. The minimum width of buffer areas shall be as follows: *05/13/97*
   a. Commercial Districts, RF & Limited Business 6 feet *10/02/94*
   b. Industrial Districts 30 feet
   c. Industrial Expansion District 50 feet *06/15/02*
   d. Interchange District 100 feet
   e. Design District 20 feet
3. The minimum width of the buffer area which shall be landscaped, seeded, and planted with evergreens shall be as follows: *05/18/97*
   a. Commercial Districts, RF & LB 6 feet *10/02/94*
   b. Industrial Districts 20 feet
   c. Industrial Expansion District 30 feet *06/15/02*
   d. Interchange and Design Districts 25 feet

   In cases where a less restrictive use is permitted to extend into a more restrictive district, the minimum width of the buffer area shall be determined by the Commission.
4. The buffer area shall be of evergreen planting of such type, height, spacing and arrangement as, in the judgment of the Commission, will

effectively screen the activity on the lot from the neighboring residential area. As a minimum, the planting shall consist of a double row of trees six feet in height planted at intervals of 10 feet on center. Non-evergreen planting may be included to supplement evergreen planting, but not to take its place.

5. A landscaped earthen berm, wall, or fence of location, height, design, and materials approved by the Commission may be accepted for any portion of the required planting and/or buffer area.
6. Where the existing topography and/or landscaping provides adequate screening, the Commission may accept the existing planting and/or buffer area as the required planting.

E. Landscaped parking area - In addition to the front landscaped area and buffer area requirements, parking areas shall comply with the following minimum standards:

1. All uses required to provide 30 or more off-street parking spaces shall have at least 10 square feet of interior landscaping within the paved portion of the parking area for each parking space and at least one tree for every 10 parking spaces or fraction thereof.

   Each separate landscaped area shall contain a minimum of 100 square feet, shall have a minimum dimension of at least eight feet, shall be planted with grass or shrubs, and shall include at least one tree of not less than two inch caliper.

2. For all uses required to provide 30 or more off street parking spaces, a landscaped area shall be provided along the perimeter of any parking area except that portion of the parking area which provides access to a street or a parking facility on an adjacent lot. Access ways to adjacent lots shall not exceed 24 feet in width and shall not exceed two in number for each purpose. The landscaped area shall have a minimum dimension of five feet, shall be planted with grass or shrubs and shall include at least one tree of not less than two inch caliper for every 50 feet along the perimeter of the parking area. In cases where the parking area adjoins a public sidewalk, the required landscaped area shall be extended to the edge of the sidewalk.
3. Trees used in parking lots shall be Thornless Honey Locust, Pine, Oak, or other similar fast-growing, hardy varieties, or existing trees where appropriately located.

§6.15 ACCESSORY APARTMENTS *04/19/08*

In order to foster affordable housing alternatives in the Town of Wallingford, a single-family dwelling may be converted to allow the incorporation of one accessory apartment in any residential district.

Approval of accessory apartments shall be subject to Site Plan approval in accordance with Article VII and the following conditions:

A. One of the occupants of the dwelling shall, at all times, be an owner of record. An owner shall be defined as someone who has at least a one-half ownership interest in the property.

B. The size of an accessory apartment shall be calculated to include its total gross floor area, measured from the exterior walls, and shall be determined as follows: *07/18/09*
   1. An accessory apartment shall have a minimum floor area of 400 sq.ft.
   2. The maximum size of an accessory apartment shall be determined by the following formula:
      a. Square footage of primary dwelling (excluding garage) + 780 sq.ft. X 35% = Maximum square footage (if this number exceeds 780 sq.ft. see below).
      b. Allowable maximum square footage for an accessory apartment shall not exceed 780 sq.ft.
   3. An accessory apartment shall have a maximum of two (2) bedrooms.

C. An accessory apartment shall be self-contained, with separate cooking, sanitary and sleeping facilities for the exclusive use of the occupant(s).

D. Exterior alterations shall be integrated with the original structure so that the appearance of a single-family dwelling is maintained. Building material and color shall match existing architecture, including windows, roofing and siding.

E. Common areas shall be treated in the following manner:
   1. Areas such as common entries and common hallways may be shared. Laundry and storage facilities may also be shared, but must be accessed through a common area or doorway to each unit as deterrence to the expansion of the permitted apartment size.
   2. Shared common areas will not be counted against the maximum allowable apartment size.
   3. In determining compliance with the maximum size limitations of Section B, gross floor area may include such common areas.

F. No accessory apartment shall be created as an addition to an attached garage unless the accessory apartment is created as a second-floor over the garage or unless the accessory apartment and the principal dwelling to which it is accessory share at least one common wall. *05/19/91*

G. No accessory building shall be used or created for the purpose of accommodating an accessory apartment.

H. Expansion of a principal dwelling shall be permitted to accommodate an

accessory apartment via dormer(s) or an addition beyond the existing foundation.

I. No accessory apartment shall be located in a basement unless one wall opens to grade.

J. Parking in accordance with §6.11 must be provided.

K. No additional curb cuts shall be provided.

L. The following submittals are required as part of the application:
   1. A site plan to scale detailing the location of the building and any proposed addition and parking in relation to the property lines.
   2. A floor plan, to scale, indicating the layout of the accessory apartment in relation to the primary dwelling. Rooms from both primary and accessory units must be labeled with their intended use.
   3. The principal dwelling shall be served by public sewer and public water supply. If not, a report from the Wallingford Health Department shall be provided indicating that the existing and/or proposed water supply and on-site sewage disposal system will adequately serve the proposed use.
   4. Prior to the issuance of a Zoning Permit or a Certificate of Occupancy for the Accessory Apartment, a notarized affidavit to verify that the owner of the property is one of the occupants of the subject dwelling shall be submitted to the Commission. Thereafter, the owner shall submit a notarized affidavit to the Planning Department annually certifying conformance to all applicable regulations as a requirement for the legalized continuance of the accessory apartment.
   02/17/17

M. The principal dwelling and accessory apartment shall conform to all requirements of the applicable building, health, fire sanitary and zoning codes.

N. A copy of the Zoning Permit containing the condition that the owner is one of the occupants shall be filed on the land records by the Commission.

§6.16 ADAPTIVE RE-USE TO MULTI-FAMILY

Any existing building in any zoning district may be converted to a multi-family dwelling subject to a Special Permit in accordance with §7.5 and the following conditions:

A. A determination by the Commission that the existing building and its environs will be suitable for multi-family conversion and shall not adversely impact the existing neighborhood character.

B. The GFA of the existing building shall be a minimum of 5,000 square feet.

C. The maximum permitted number and type of dwelling units on the lot shall be determined by dividing the GFA of the existing building by one or more of the following factors:

600 for one-bedroom units
900 for two-bedroom units
1,200 for three-bedroom units

D. If the maximum permitted number of dwelling units shall not be achieved within the existing building, an addition may be permitted provided that:

1. The maximum permitted number and type of dwelling units do not exceed C. above.
2. The addition does not exceed 50 percent of the GFA of the existing building.
3. The addition conforms to all other zoning requirements of the district in which located.
4. The addition conforms architecturally and in scale to the existing building.

E. The existing building and addition, if any, shall be served by public sewer and public water supply, except that the Commission may waive this requirement when it is demonstrated that this requirement would be unreasonable and that sufficient on-site water/sewer will be provided and can be supported by the property. *06/19/10*

F. Parking as required by §6.11.C.

§6.17 - Deleted - *05/14/94*

§6.18 SOIL EROSION AND SEDIMENT CONTROL

A. Purpose - To provide minimum standards for soil erosion and sediment control for all development within the Town.

B. Definitions

For the purpose of this section, the following definitions shall apply:

1. Certification - A signed, written approval by the Commission that a Soil Erosion and Sediment Control Plan complies with the applicable requirements of these regulations.
2. County Soil and Water Conservation District - The New Haven County Soil and Water Conservation District established under subsection (a) of §22a-315 of the General Statutes.
3. Development - Any construction or grading activities to improved or unimproved real estate.
4. Disturbed area - An area where the ground cover is destroyed or removed leaving the land subject to accelerated erosion.
5. Erosion - The detachment and movement of soil or rock fragments by water, wind, ice or gravity.
6. Grading - Any excavating, grubbing, filling (including hydraulic fill) or stockpiling of each material or any combination thereof, including the land in its excavated or filled condition.
7. Inspection - The periodic review of sediment and erosion control measures shown on the certified plan.
8. Sediment - Solid material, either mineral or organic, that is in suspension, is transported, or has been moved from its site of origin by erosion.
9. Soil - Any unconsolidated mineral or organic material of any origin.
10. Soil Erosion and Sediment Control Plan (Soil Plan)- A scheme that minimizes soil erosion and sedimentation resulting from development and includes, but is not limited to, a map and narrative.

C. Activities Requiring a Certified Soil Erosion and Sediment Control Plan (Soil Plan)

A Soil Plan shall be submitted with any application for development when the disturbed area of such development is cumulatively more than one-half acre.

D. Exemptions

A single-family dwelling shall be exempt from these requirements for a Certified Soil Erosion and Sediment Control Plan. *10/02/94*

E. Soil Erosion and Sediment Control Plan

1. To be eligible for certification, a Soil Plan shall contain proper provisions to adequately control accelerated erosion and sedimentation and reduce the danger from storm water run-off on the proposed site based on the best available technology. Such principles, methods and practices necessary for certification are found in the Connecticut Guidelines for Soil Erosion and Sediment Control (1985) as amended. Alternative principles, methods and practices may be used with prior approval of the Commission.

2. Said Soil Plan shall contain, but not be limited to:
   a. A narrative describing:
      (1) The development.
      (2) The schedule for grading and construction activities including:
         (a) Start and completion dates.
         (b) Sequence of grading and construction activities.
         (c) Sequence for installation and/or application of soil erosion and sediment control measures.
         (d) Sequence for final stabilization of the project site.
      (3) The design criteria for proposed soil erosion and sediment control measures and storm water management facilities.
      (4) The construction details for proposed soil erosion and sediment control measures and storm water management facilities.
      (5) The installation and/or application procedures for proposed soil erosion and sediment control measures and storm water management facilities.
      (6) The operations and maintenance program for proposed soil erosion and sediment control measures and storm water management facilities.
   b. A Site Plan map at a sufficient scale to show:
      (1) The location of the proposed development and adjacent properties.
      (2) The existing and proposed topography including soil types, wetlands, watercourses and water bodies.
      (3) The existing structures on the project site, if any.
      (4) The proposed area alterations including cleared, excavated, filled or graded areas and proposed structures, utilities, roads and, if applicable, new property lines.
      (5) The location of, and design details for, all proposed soil erosion and sediment facilities.
      (6) The sequence of grading and construction activities.
      (7) The sequence for installation and/or application of soil erosion and sediment control measures.
      (8) The sequence for final stabilization of the development site.
   c. Any other information deemed necessary and appropriate by the applicant or requested by the Commission or its designated agent.

F. Minimum Acceptable Standards

1. Soil Plans shall be developed in accordance with these regulations using the principles as outlined in Chapter 3 and 4 of the Connecticut Guidelines for Soil Erosion and Sediment Control (1985), as amended. Soil Plans shall result in a development that: shall minimize erosion and sediment during construction; and shall not cause off-site erosion and/or sedimentation.
2. The minimum standards for individual measures shall be those in the Connecticut Guidelines for Soil Erosion and Sediment Control (1985), as amended. The Commission (or the County Soil and Water Conservation District) may grant exceptions when requested by the applicant if

technically sound reasons shall be presented.

3. The appropriate method from Chapter 9 of the Connecticut Guidelines for Soil Erosion and Sediment Control (1985), as amended, shall be used in determining peak flow rates and volumes of runoff unless an alternative method shall be approved by the Commission.

G. Issuance or Denial of Certification

1. The Commission shall either certify that the Soil Plan, as filed, complies with the requirements and objectives of this regulation or deny certification when the development proposal shall not comply with these regulations.
2. Nothing in these regulations shall be construed as extending the time limits for the approval of any application under Chapters 124, 124A or 126 of the General Statutes.
3. Prior to certification, any Soil Plan submitted to the Town may be reviewed by the County Soil and Water Conservation District which may make recommendations concerning such plan, provided such review shall be completed within thirty days of the receipt of such plan.
4. The Commission may forward a copy of the Soil Plan to the Conservation Commission or other review agency or consultant for review and comment.

H. Conditions Relating to Soil Erosion and Sediment Control

1. The estimated costs of measures required to control soil erosion and sedimentation, as specified in the certified plan, may be covered in a performance bond or other assurance acceptable to the Commission in accordance with the provisions specified under §8.4 or §8.10 of these regulations.
2. Site development shall not begin unless the Soil Plan shall be certified and those control measures and facilities in the Plan scheduled for installation prior to site development shall be installed and functional.
3. Planned soil erosion and sediment control measures and facilities shall be installed as scheduled according to the certified plan.
4. All control measures and facilities shall be maintained in effective condition to ensure the compliance of the certified plan.

I. Inspection

Inspection shall be made by the Commission or its designated agent during development to ensure compliance with the certified plan and that control measures and facilities shall have been properly performed or installed and maintained. The Commission may require the permittee to verify through progress reports that soil erosion and sediment control measures and facilities have been performed or installed according to the certified plan and are being operated and maintained.

§6.19 SALE OF ALCOHOLIC LIQUORS FOR OFF-PREMISES CONSUMPTION

1. No building or premises which prior to the effective date of these regulations is not the site or location of a business where alcoholic liquor is sold at retail for consumption off-premises under a package store permit, druggist permit or druggist permit for beer only, shall thereafter be used either in whole or in part or the sale of alcoholic liquor, wine, beer or ale under any package store permit, package store beer permit, grocery store beer permit, druggist permit or druggist permit for beer only, if any entrance to such building or premises shall be within a radius of 1,500 feet from any entrance to any other building or premises which is being used or for which permission to be used has been granted or is in the process of being granted by the State Liquor Control Commission for the sale of alcoholic liquor, wine, beer or ale under any package store permit, package store beer permit, grocery store, grocery store beer permit, druggist permit or druggist permit for beer only, except as hereinafter provided.
2. Any Permittee using any building or premises for the sale of alcoholic liquors, wine, beer, or ale under a package store permit, package store beer permit, grocery store beer permit, druggist permit or druggist permit for beer only, issued by the said Liquor Control Commission, may move said place of business to another building or premises which shall be within the above-described radius of 1,500 feet, provided that said other building or premises shall not be more than 1,500 yards from the building or premises formerly occupied by said Permittee as a place for the sale of alcoholic liquor under permit issued by the said Liquor Control Commission, and that said location shall be in an area zoned for such use and that said removal shall be in accordance with the said Liquor Control Commission's rules and regulations. *11/14/98*
3. The provisions of this section shall not be retroactive, except that any building or premises being used for the sale of alcoholic liquor under permit from the Liquor Control Commission which shall be discontinued for such use for a period of 30 days shall thereafter conform to these regulations.
4. The provisions of this section shall not apply to retailers whose sales, delivery or shipment of alcohol is limited to that permitted by a gift basket retailer permit under the provisions of Connecticut General Statutes, (number to be assigned)and shall not apply to the delivery, shipment or sales of alcoholic beverages manufactured on site under the following: manufacturer permit for liquor, manufacturer permit for beer, manufacturer permit for cider, manufacturer permit for apple brandy and eau-de-vie, manufacturer permit for brew pub under the provisions of Connecticut General Statutes. *10/01/11, 10/01/15*

§6.20 ADULT USES REGULATIONS

NOTE: For the purposes of this section only, school shall mean day-care, nursery school and public, private or parochial schools from K-12.

Purpose - The intent of this section is to regulate uses which, because of their very nature, are recognized as having serious objectionable characteristics, particularly when several of them are concentrated under certain circumstances thereby having a deleterious effect upon the adjacent areas. Special regulation of these uses is necessary to ensure that these adverse effects will not contribute to the blighting or downgrading of the surrounding neighborhood. The primary control or regulation is for the purpose of preventing a concentration of these uses in any one area.

B. Definitions - For the purpose of this section, the following definitions shall apply:

1. Adult Book Store - An establishment having as a substantial or significant portion of its stock in trade books, magazines, films for sale or viewing on premises by uses of motion picture devices or any coin-operated means, and other periodicals which are distinguished or characterized by their emphasis on matter depicting, describing or relating to "Specified Sexual Activities" or "Specified Anatomical Areas", or an establishment with a segment or section devoted to the sale or display of such material.
2. Adult Motion Picture Theater - An enclosed building with a capacity of 50 or more persons used regularly and routinely for material having as a dominant theme material distinguished or characterized by an emphasis on matter depicting, describing or relating to "Specified Sexual Activities" or "Specified Anatomical Areas", for observation by patrons therein.
3. Adult Mini-Motion Picture Theater - An enclosed building with a capacity for less than 50 persons used for material having as a dominant theme material distinguished or characterized by an emphasis on matter depicting, describing or relating to "Specified Sexual Activities" or "Specified Anatomical Areas", for observation by patrons therein.
4. Adult Entertainment Cabaret - A public or private establishment which is licensed to serve food and/or alcoholic beverages, which feature topless dancers, strippers, male or female impersonators, or similar entertainers, or acts relating to "Specified Sexual Activities" or "Specified Anatomical Areas", for observation by patrons therein.
5. "Specified Sexual Activities" is defined as:
   a. Human genitals in a state of sexual stimulation or arousal;
   b. Acts of human masturbation, sexual intercourse or sodomy;
   c. Fondling or other erotic touching of human genitals, pubic region, buttock or female breast.
6. "Specified Anatomical Area" is defined as:
   a. Less than completely and opaquely covered:(I) human genitals, pubic region, (II) buttock and (III)female breast below a point immediately above the top of the areola.
   b. Human male genitals in a discernibly turgid state, even if completely and opaquely covered.

C. Regulated Uses - Regulated uses include all Adult Uses which include, but

are not limited to, the following:

Adult Book Store
Adult Entertainment Cabaret
Adult Mini-Motion Picture Theater
Adult Motion Picture Theater

1. Adult Uses shall be permitted subject to the following restrictions:
   a. No such Adult Use shall be allowed within 1000 feet of another existing Adult Use. The 1000 feet shall be the straight horizontal distance from any part of a building housing an Adult Use, to any part of the other building housing an Adult Use, as measured by the Wallingford Town Engineer. *04/17/90*
   b. No such Adult Use shall be located within 1000 feet of any Zoning District which is zoned for Residential Use. The 1000 feet shall be the straight horizontal distance from any part of a building housing an Adult Use to any boundary of a Zoning District which is zoned for Residential Use, as measured by the Wallingford Town Engineer. *04/17/90*
   c. No such Adult Use shall be located within 1000 feet of a pre-existing school or place of worship. The 1000 feet shall be the straight horizontal distance, as measured by the Wallingford Town Engineer, from any part of a building housing an Adult Use to any part of a building housing a school or place of worship. 0*4/17/90*
   d. No such Adult Use shall be located in any Zoning District except CA, CB, or I Zoned areas.
2. The provisions of C.1.a through C.1.d above shall not be deemed to be retroactive, except that any building or premises being used for Adult Uses as defined herein whose use for such purpose shall be discontinued for a period of 30 days shall thereafter conform to these regulations.

D. Exterior Display - No Adult Use shall be conducted in any manner that permits the observation of any material depicting, describing of relating to "Specified Sexual Activities" or "Specified Anatomical Areas", from any public way or from any property not registered as an Adult Use. This provision shall apply to any display, decoration, sign, show window or other opening.

E. Registration

1. The owner of a building or premises, his/her agent for the purposes of managing, controlling, or collecting rents, or any other person managing or controlling a building or premises, any part of which contains an Adult Use, shall register with the Zoning Enforcement Officer the following information:
   a. The address of the premises.
   b. The name of the owner of the premises and names of the beneficial owners if the property is in a land trust.
   c. The address(es) of the owner and the beneficial owners.
   d. The name of the business or the establishment subject to the provisions of paragraph C.
   e. The name(s) of the owner(s), beneficial owner or the major stock holders of the business or the establishment subject to the provisions of paragraph C.
   f. The address(es) of those persons named in subparagraph(e).
   g. The date of initiation of the Adult Use.

h. If the building or premises is leased, a copy of the said lease shall be attached.

2. It shall be unlawful for the owner or person in control of any property to establish or operate thereon or to permit any person to establish or operate an Adult Use without first having properly registered and received certification of approved registration; pre-existing Adult Uses prior to the effective date of this Regulation shall register within ten days of the effective date of this Regulation.
3. The owner, manager or agent of a registered Adult Use shall display a copy of the Registration Form approved by the Zoning Enforcement Officer in a conspicuous place on the premises.

§6.21 FENCING REQUIRED FOR LOTS ALONG I-91

All lots developed for residential purposes along the right-of-way of I-91 shall be provided with a six-foot chain link fence along the non-access line.

§6.22 MULTI-FAMILY CONVERSIONS *01/30/90*

Purpose: To encourage greater densities in residential neighborhoods located in the general vicinity of the Central Business District while maintaining the existing character of the neighborhoods. In addition, it is the purpose of this section to encourage increased off-site parking, fewer curb cuts and improve landscaping standards within the neighborhoods.

Existing legal, multi-family dwellings in R-6 and R-ll zones may be permitted additional dwelling units subject to Site Plan Approval in accordance with Article VII and all of the following conditions:

A. The dwelling shall be served by public water and sewer.

B. All dwelling units (11/17/07) shall have a minimum floor area of 300 sq. ft.

C. Total number of units (11/17/07) per dwelling shall not exceed the number of stories per dwelling and only one dwelling unit (11/17/07) will be permitted in each story except that basement and cellar dwelling units (11/17/07) will not be permitted. *01/19/92*

D. Only one curb cut will be permitted per dwelling.

E. All non-sidewalk municipal right-of-way areas shall be landscaped.

F. No accessory building shall be used or constructed as a dwelling unit.

G. Parking as per §6.ll except that no front yard parking be permitted.

H. Landscaping as per §6.l4. In addition, landscaping that meets the following requirements will be allowed:

   l. Any portion of the property line in the rear yard that does not have a six-foot landscaped buffer will require screening. On corner lots, required on-site parking areas will be screened from the street. Such screening will consist of fences, walls or shrubs of at least three feet in height. *01/19/92*
   2. The requirements as described in §6.22.H.l can be waived by the Commission for any sideyard where a shared parking arrangement for two adjacent properties involving one driveway for both properties is proposed. Agreement should be filed on the land records with the Town Clerk.
   3. Extent of rear yard landscaping shall comprise of at least 25% of the rear yard area.

I. The entire dwelling shall conform to all requirements of the applicable building, health, fire, sanitary, and zoning codes.

§6.23 SITE LINES AT INTERSECTIONS *10/02/94*

For a distance of 50 feet from the point of 2 intersecting property lines nearest to the street intersections, the area shall be clear of fences, walls, or plantings more than 3 feet above the edge of pavement.

§6.24 ROOF STRUCTURES *10/02/94*

All H.V.A.C., elevator, utility and other roof structures shall be screened from view and shall not exceed 15% of roof area.

§6.25 TELECOMMUNICATIONS FACILITIES
06/16/07

A. The intent of this section is to permit the location of wireless telecommunications antennas on existing structures within the Town of Wallingford to minimize the adverse visual effects of new telecommunications towers.

B. Structure and rooftop mounted panel and whip antennas, with an equipment building or equipment structure, shall be permitted in all zoning districts by Zoning Permit, subject to the following:

1. Shall not be attached to a one-family to four-family dwelling unit nor to an accessory building on a lot containing a one-family to four-family dwelling;
2. shall be of a material or color that matches the exterior of the building or structure;
3. if roof mounted, shall not exceed a height of fifteen (15) feet above the highest part of the structure or building;
4. if façade mounted:
   a. Shall not project more than two (2) feet beyond the wall or façade of the structure;
   b. shall not project more than five (5) feet above the cornice line.
5. All equipment buildings and/or structures shall be screened with appropriate landscaping.
6. Satellite and microwave dish antennas shall not exceed six (6) feet (2 feet in residential zones) in diameter and shall be located or screened so as not to be visible from abutting public streets.

C. General Standards for Equipment Buildings/Structures

1. Each building/structure shall not contain more than 750 square feet of gross floor area or be more than twelve (12 feet in height.
2. Each building/structure shall comply with the setback requirements for accessory buildings for the zone in which it is located.
3. If located on the roof of a building, equipment buildings/structures shall not occupy more than 15% of the roof area and shall be designed to blend with the color and design of the building to the extent possible.

D. Application Requirements

1. Each application shall include a map showing:
   a. The extent of planned coverage within the Town of Wallingford;
   b. approved locations of all other telecommunication sites in Wallingford, including the applicant’s;
   c. the location and service area of the proposed telecommunications site.
2. The following information shall also be submitted:
   a. A plan showing where and how the proposed antenna will be affixed to a particular building or structure;

b. details of all proposed antenna and mounting equipment including size and color;
c. elevations of all proposed shielding and details of materials including color;
d. an elevation of all proposed equipment buildings/structures with details of all proposed fencing, including color;
e. all proposed landscaping with list of plant material.

§6.26 UTILITIES AND LIGHTING *02/07/98*

A. Purpose – To improve the appearance of streetscapes by removing the proliferation of overhead wires and unnecessary illumination of properties.

B. All utilities shall be placed underground except under the following circumstances:

1. An upgrade of service to an existing dwelling unit or mobile home.
2. New construction on a lot on an existing Town or State road where,
   a. the installation of a new utility pole will not be required, and
   b. at least 50% of existing principal building within 1,000 feet of the parcel are served overhead electric. This provision shall not apply to lots on existing Town or State roads which are created as part of a new subdivision in which a new street is proposed
3. The extension of electric distribution facilities along an existing Town or State road by the Wallingford Electric Division, only as approved by the Wallingford Planning and Zoning Commission. *04/09/05*
4. The relocation of above-ground electric distribution facilities located along public roads which roads were subsequently discontinued by the Town or State of Connecticut and then conveyed to the abutting property owner(s) *09/15/07*

C. The following standards shall apply to the installation of all new exterior lights and illuminated signs:

1. All parking area lighting will be full cut-off type fixtures.
2. Up lighting is prohibited. Externally lit signs, display, building and aesthetic lighting shall be lit from the top and shine downward. The lighting shall be shielded to reduce direct glare and/or light trespass. The lighting shall be, as much as physically possible, contained to the target area. Internally lighted signs are acceptable.
3. All building lighting for security or aesthetics shall be full cut-off or a shielded type, not allowing any upward distribution of light. Floodlighting is discouraged, and if used, must be shielded to prevent:
   a. disability glare for drivers or pedestrians,
   b. light trespass beyond the property line, and
   c. light above a 90-degree horizontal plane.
4. All exterior lights and illuminated signs shall be designed, located, installed, and directed in such a manner as to prevent objectionable light at, (and glare across), the property lines and disability glare at any location on, or off, the property. The

luminance recommendations set by the Illuminating Engineering Society of North America (IES)shall be observed.

5. Signs and Lighting
   a. Locations, size height, orientation, and plans of all signs and outdoor lighting.
   b. A detail drawing showing type of fixture and level of wattage.
   c. An iso-lux plan indicating levels of illumination in foot-candles at ground level shall be provided by all uses adding 10 or more parking spaces.

D. Exemptions - The provisions and regulations of this section shall not apply to the following: *12/12/98*

1. Customary lighting to illuminate the American Flag
2. Customary exterior illumination of a one or two-family dwelling and driveway.

2/07/98

§6.27 SLOPES

Disturbed land shall be evenly graded to slopes not exceeding 1 foot of vertical rise to 2 feet of horizontal distance. The Planning and Zoning Commission may modify this requirement upon the recommendation of the Town Engineer. *05/15/99*

§6.28 GUARDRAILS

For uses required to provide five or more parking spaces, guardrails shall be installed in locations designated by the Town Engineer in areas where parking spaces abut slopes which fall away in excess of 4 to 1 and in excess of a vertical change of 4 feet. *02/14/99*

§6.29 FIRE PROTECTION

A. All uses for which a site plan is required shall provide for adequate fire protection including adequate traffic flow of fire and emergency vehicles.

B. Buildings constructed with private fire protection systems shall have, for water supply to that system, a dedicated fire hydrant and remote siamese in close proximity (5' to 15') to that hydrant.

The hydrant must be installed so it is in line of sight of arriving fire apparatus using the normal or main driveway entrance to the property. *02/14/99*

§6.30 GRADING; WATER AND WATERCOURSES *08/16/08*

A. All new construction in all zones shall be designed, built and maintained to establish and maintain landscaping and grading so as not to divert, re-direct or otherwise alter the natural surface flow of storm water or the natural flow of a watercourse in such volume or concentrated flow as to cause erosion, flooding or detriment to properties whether adjoining or not, except as may be shown on the approved plan.

B. Landscaping and grading on all properties in all zones with established grading, landscaping and structures shall not be modified so as to divert, re-direct or otherwise alter the natural surface flow of storm water or of a watercourse in such volume or concentrated flow as to cause erosion, flooding or other detriment to properties, whether adjoining or not.

C. The landscaping and grading prohibited by sub-parts A and B of this section includes, except as permitted by an approved plan, but is not limited to:
   1. The addition and placement of fill which causes an increase in the volume and concentration of storm water or of a watercourse spilling over on to properties, whether adjoining or not;
   2. The addition and placement of fill which causes an increase in the volume or concentration of a watercourse thereby causing it to flow beyond its normal channel onto properties, whether adjoining or not;
   3. The digging of trenches or swales or the installation of piping

which thereby directs storm water or a watercourse onto properties, whether adjoining or not, in a greater volume or concentration than existed before the installation of said trenching or piping;

4. The construction and installation of any structure which results in causing storm water or a watercourse to flow onto properties, whether adjoining or not, in a greater volume or concentration than was the case before said construction and installation; and
5. The construction and installation of impervious material which is so constructed or installed as to direct storm water or a watercourse onto properties, whether adjoining or not, in a greater volume or concentration than was the case before said material was constructed and installed.

§6.31 ACCESS

Any proposed street in a subdivision shall connect to an existing Town street or State highway or to another street approved by the Commission where the applicant has access rights with the following exception: In the event that a subdivision requires sole access from a public street in another town, a Special Permit, in accordance with §7.5 of these regulations, shall be required. *10/15/11*

§**6.32 MEDICAL MARIJUANA MORITORIUM** *12/08/14 12/10/13*

Section 6.32 (NEW) of the Wallingford Zoning Regulations is hereby amended by adding the following:

A. All uses permitted under Public Act 12-74 are governed by this moratorium. For purposes of this section, the terms "Dispensary Facility", Marijuana" and "Production Facility" shall have the meanings ascribed to them in Sec. 21a-409-1 of the State of Connecticut Regulations of the Department of Consumer Protection as that section may be amended from time to time.

B. Marijuana dispensary facilities, marijuana production facilities, and pharmaceutical manufacturing facilities, under Public Act 12-74, are not permitted uses in any zone.

C. Further, use variances for the uses specified in (A) are prohibited.

D. For nine (9) months following the effective date of this regulation, a moratorium on applications seeking to obtain approval of the production and/or dispensing of medical marijuana as a permitted use and/or by way of a use variance is prohibited, this moratorium shall be in effect in order to provide the Commission sufficient time to determine what, if any, amendments to the Regulations are desired on the subject of these uses.

E. This moratorium is effective upon passage.

§6.33 BUILDING ORIENTATION *02/17/17*

The "front", including primary building entrance, of any building to be built on property abutting a road designated as a thoroughfare, shall be oriented to run parallel to the lot frontage and not be blocked by any other walls or portion of a building.

ARTICLE VII

Site Plan and Special Permit Review and Approval

04/11/93 10/18/03 03/02/13

7.1 SITE PLAN

A. For all non-residential uses of land or buildings including any changes of use or expansion, and for all residential uses requiring four or more off-street parking spaces, a Site Plan review and approval shall be required before any Building Permit may be issued.

B. All applications for Special Permits shall include a plan containing all of the required information listed in §7.4, as part of the Special Permit application package. This plan shall be reviewed as part of the Special Permit application. *10/18/03*

C. Administrative Approvals: The Commission shall have the authority to waive review at a public meeting and thus approve administrative, application for: changes of use of existing buildings where the proposed use is a permitted use; parking areas; minor modifications to site layout; and/or minor expansions of existing buildings; provided that the expansion and;/or modification does not significantly impact or cause concern regarding existing parking, circulation, drainage, relationship of buildings to each other, landscaping buffering, and other considerations of site plan review. *03/02/13*

§7.2 SITE PLAN OBJECTIVES

In reviewing a Site Plan application, the Commission shall take into consideration the health, safety and welfare of the public in general, and the immediate neighborhood in particular, and may prescribe reasonable conditions and safeguards to ensure the accomplishment of the following general objectives:

A. Town Plan of Development - That the proposed Site Plan shall be in general conformance with the intent of the Town Plan; however, the Town Plan shall not take precedence over specific provisions of the Zoning Regulations.

B. Public safety - That all buildings, structures, uses, equipment, or material shall be accessible for fire and for police protection.

C. Traffic and pedestrian access - That all proposed traffic and pedestrian access ways shall not create traffic hazards and shall be adequate, but not excessive in number; adequate in width, grade alignment, and visibility; adequate in distance from street corners, places of public assembly and other access ways; and adequate in design for other similar safety considerations. Pedestrian access shall include public sidewalks. *08/16/08*

D. Circulation and parking - That adequate off-street parking and loading space shall be provided to prevent on-street and off-street traffic congestion; that all parking spaces, maneuvering area shall be suitably identified; that entrances and exits shall be suitably identified and designed to specific use radii; that the interior circulation system shall be adequately designed to provide safe and convenient access to all structures, uses, and/or parking spaces; that parking areas shall be

provided with suitable bumper guards, guard rails, islands, crosswalks, speed bumps and similar safety devices when deemed necessary by the Commission to adequately protect life and property; and that provision shall be made for safe pedestrian movement within and adjacent to the property by the installation of sidewalks.

E. Landscaping and screening - That the landscaping of the site shall comply with the purpose and intent of §6.14; that existing trees are preserved to the maximum extent possible; and that parking, storage, refuse and service areas are suitably screened during all seasons from the view of adjacent residential areas and public right-of-ways.

F. Lighting - That lighting of the site shall be adequate at ground level for the protection and safety of the public in regard to pedestrian and vehicular circulation. That glare from the installation of outdoor lights and illuminated signs shall be properly shielded from the view of adjacent property and public rights-of-way.

G. Public health - That all utility systems shall be suitably located, adequately designed, and properly installed to serve the proposed uses, and to protect the environment from adverse air, water, or land pollution.

H. Environmental features - That the development of the site shall preserve sensitive environmental land features such as steep slopes, wetlands and large rock outcroppings and shall attempt to preserve public scenic views or historically significant features.

I. Drainage - The design of storm water drainage systems shall be such as to minimize soil erosion and maximize absorption of pollutants by the soil, runoff from impervious areas shall be attenuated to reduce peak flow volume and sediment loads to predevelopment levels.

J. Water Quality - That all buildings, structures and uses shall be designed to protect the quality of Wallingford's surface and groundwater resources.

§7.3 PROCEDURE

A. Application for Site Plan Approval shall be made to the Commission on a form prescribed by the Commission one day prior to a regular meeting and shall be accompanied by plans, elevations and any other data necessary to show the detail of the proposed use of land or buildings, as outlined in §7.4. A minimum of sixteen copies of the supporting information shall be submitted with an application. Prior to submission of a formal Site Plan application, the applicant may meet with the Town Planner to discuss the Site Plan application. If the Commission or Town Planner deems it appropriate, they may waive the submission of specific information identified in §7.4.

B. The Commission shall act to approve, reject, or approve with conditions within the time limits established by §8-7(d) of the Connecticut General Statutes *10/01/03*

C. Before approval shall be granted by the Commission under this section, the applicant may be required to post a bond in accordance with §8.10.

D. The Commission shall refer any Site Plan application to any Town Department or other agency the Commission deems appropriate, and may request any such department or agency to submit a written report to the Commission a minimum of 72 hours prior to the meeting on matters that are of concern to it in connection with its own responsibility.

E. After approval, the applicant shall submit six copies of the approved Site Plan, showing any required revisions. Any conditions of approval shall be so noted.

F. Any applicant having obtained approval of a Site Plan shall complete all work within the time limits established by §8-3 of the Connecticut General Statutes. All site plans shall be developed and used in accordance with the plans approved by the Commission, as well as any conditions of approval attached to those plans. *09/19/92 09/19/09*

G. Application for amendments to an approved Site Plan shall be made in the same manner as the original application, except that minor modifications may be approved by the Commission Chairperson. Changes or amendments to an approved Site Plan after commencement of construction may be approved in the filed by the Town Engineer or the Town Planner, or their designee. If the change or amendment is deemed major by the Town Planner, it will be considered at a special or regular meeting of the Commission. If changes or amendments to the approved plan are made without notice to the Commission or to its designee, then and in such event, the Commission or its designee may deny a Certificate of Zoning Compliance or other necessary approvals for the building or other construction involved. *09/13/08*

H. All conditions and improvements shown on an approved Site Plan shall remain with the property, as long as the use indicated on the approved Site Plan shall still be in operation. The conditions and improvements shall continue in force, regardless of any change in ownership of the property.

I. An applicant wishing to request Administrative Approval in accordance with §7.1C must submit with the application a letter which requests Administrative Approval consideration , explains the basis for the Administrative Approval request, and provides a summary of proposed uses and site modifications. An Administrative Approval shall not be approved unless, and until, all members of the Commission have a minimum of fourteen (14) days to review the application and other submitted information. During this fourteen (14) day review period, should any Commissioner consider the application not minor in nature, consider the application to significantly impact the considerations noted above, and/or to otherwise request, the application shall not receive Administrative Approval and shall be placed on a Planning and Zoning Commission agenda for discussion and action by the entire Commission. If no such request is made during the review period, the application shall receive Administrative Approval. *03/02/13*

§7.4 SITE PLAN INFORMATION

For all uses requiring Site Plan Approval, a Site Plan application shall include a minimum of sixteen sets of the following information, maps and plans:

All maps shall include an accurate Class A-2 Survey of the property prepared by a land surveyor registered in the State of Connecticut. All Site Plans shall be prepared, signed and sealed by a Connecticut registered engineer, architect,

surveyor or landscape architect, whichever is appropriate. All plans shall be prepared at a scale of one inch equals not less than 20 feet or, no more than 40 feet, on sheets not to exceed 24 inches by 36 inches. During the approval process, maps shall be submitted with the proper seals and may contain the statement:

"THIS DOCUMENT HAS BEEN PREPARED AS PART OF THE TOWN OF WALLINGFORD (I.W.W.C., T.P.Z., OR Z.B.A.) APPLICATION PROCESS AND CAN NOT BE CONSIDERED FINAL NOR USED FOR CONSTRUCTION PURPOSES UNTIL ALL NECESSARY APPROVALS HAVE BEEN ATTAINED"

All final maps shall be properly signed and sealed *02/14/99*

A. Site Plan map: The Site Plan map shall illustrate the existing and proposed development of the property and shall include the following information:

1. General information:
   a. Name and address of the applicant and owner of record as listed on the Town's land records, and applicant's interest in property.
   b. Date, north arrow, and numerical and graphical scale.
   c. A key map showing the subject property in relationship to adjoining and nearby streets, at a scale of 1 inch = 1,000 feet.
   d. A table or chart indicating the proposed number or amount and types of uses, lot area, lot width, yards, building height, coverage, floor area, parking spaces, landscaping, open spaces, wetlands and other elements as they relate to the requirements these of Regulations.
2. The property:
   a. The boundaries and area of the property and names of all abutting owners, including those across the street.
   b. Location, width, and purpose of all existing and proposed easements and rights-of-way on the property.
3. Building and uses:
   a. Location, dimensions, area, height and setbacks of all existing and proposed buildings, signs, fences, and walls.
   b. Location of all existing and proposed uses and facilities not requiring a building such as but not limited to, swimming pools, tennis courts, light standards, tanks, transformers, dumpsters and recycling containers.
4. Parking, loading, and circulation:
   a. Location, arrangement, and dimensions of automobile parking spaces, aisles, vehicular drives, fire lanes, entrances, exits, and ramps.
   b. Location, arrangement, and dimensions of loading docks, loading and unloading areas.
   c. Location and dimensions of pedestrian walkways, entrances, and exits.
5. Signs and lighting:
   a. Location, size, height, orientation and plans of all signs.
   b. Location, size, height, orientation and design of any outdoor lighting.
6. Utilities:
   a. Location and design of all existing and proposed sanitary sewers, storm drainage, water supply facilities, septic tanks, leaching fields and refuse collection areas, as well as other underground and above ground utilities.

B. Topographic map: The topographic map shall illustrate the existing and proposed conditions of the property and shall illustrate the following information:

1. The boundaries and area of the property.
2. Location, width, and purpose of all existing and proposed easements and rights-of-way on the property.
3. Existing and proposed contours with intervals of 2 feet, referred to USGS MSL datum including all provisions for erosion control.
4. Location of all existing wooded areas, watercourses, wetlands, rock outcrops, and other significant physical features, and, where appropriate, the mean high water line, the wetlands boundary, the flood hazard area, the aquifer boundary, slopes over 25%, and stream encroachment lines.
5. The approximate amount of earth products to be filled or removed from the site, if the amount exceeds 100 cubic yards.

C. Open Space and Landscaping Plan: The Open Space and Landscaping Plan shall illustrate the existing and proposed landscape development of the property and shall include the following information:

1. Size, arrangement, uses, and dimension of all open spaces on the site.
2. Location, general layout, type and size of buffer or landscape area, plant material, fencing, screening devices, decorative paving, or other materials proposed.
3. Location of existing trees with a trunk caliper of six inches or more and the species except in densely wooded areas where the foliage line shall be indicated. *12/12/98*
4. Location of all existing watercourses, wetlands, rock outcrops and other significant physical features.
5. Location of open space areas shown on an approved Master Concept Plan, in accordance with §4.10.f, if applicable. All sites located within a subdivision for which a Master Concept Plan has been approved shall be governed by the open space delineation shown on that plan.

D. Architectural plans: For all Special Permit uses, unless waived by the Commission, the applicant shall submit preliminary architectural drawings showing elevations of all proposed buildings and structures in addition to a sketch of the proposed building(s) in relation to existing neighboring buildings. For uses requiring only Site Plan approval, such architectural plan shall be submitted for informational purposes.

E. Staging plan map: In cases where the applicant wishes to develop in stages, an overall site and staging plan indicating ultimate development for the entire property shall be submitted at the same scale as the Site Plan.

F. Sedimentation and erosion control plan: All applications shall contain the information required under §6.18.

G. Other information: The applicant shall submit any other information deemed by the Commission to be necessary to determine conformity with the intent of these regulations, including, but not limited to variances, Inland Wetlands permits, Health Department permits.

H. Exceptions: The Town Planner, with the consent of the Commission

Chairperson, may make exceptions to the Site Plan information required in this Section if the construction or alteration or change of use does not affect existing circulation, drainage, relationship of buildings to each other, landscaping, buffering, lighting, or other considerations of Site Plan review.

§7.5 SPECIAL PERMITS

A. Applicability.

1. A Special Permit shall be required for all uses specifically listed in these regulations.
2. No Building Permit for any use requiring a Special Permit shall be issued by the Building Official except after public notice and hearing in accordance with General Statutes and upon authorization of the Commission.
3. When the use of land or a building or structure existed prior to the adoption of these regulations which is only allowed hereafter upon approval as a Special Permit, such existing use shall be considered a permitted use, provided the provisions of this section shall apply to all proposed changes to such existing use.
4. Where two or more Special Permit uses apply to the same premises, the minimum requirements shall be the minimum requirements for each use as specified in these regulations, or in case of two or more Special Permit uses in the same building, whichever requirements shall be more restrictive.

B. Criteria for Evaluating a Special Permit: The Commission shall consider and evaluate each and every application for a Special Permit by applying, at a minimum, the following criteria: *03/15/97*

1. Appropriateness of location or use:
   a. The size and intensity of the proposed use or uses and its or their effect on and compatibility with the adopted Plan of Development, the specific zone and the neighborhood;
   b. The existence of other uses of the same kind or character in the neighborhood and the effect thereof on said neighborhood;
   c. The capacity of adjacent streets to handle peak traffic loads and hazards created by the use;
   d. The obstruction of light or air, or the emission of noise, light, smoke, odor, gas, dust or vibration in noxious or offensive quantities, and the distance between offensive processes and adjacent properties;
   e. Unusual topography of the location, the nature, location, and height of buildings, walls, stacks, fences, grades and landscaping of the site;
   f. The extent, nature and arrangement of parking facilities, entrances and exits;
   g. Problems of fire and police protection;
   h. The preservation of the character of the neighborhood;
   i. The availability of adequate sewerage and/or water supply;
   k. All other standards prescribed by these Regulations.
2. Conformance: Conformance with the Wallingford Zoning Regulations and, where applicable, the Wallingford Subdivision Regulations and any applicable laws, codes or ordinances.

3. Safety, Health and Environment: Accessibility for emergency vehicles and equipment; proper utility, drainage, driveways and similar specifications; pedestrian access, mobility and safety; impact on the environment shall be considered. *08/16/08*
4. Overall Design, Architectural Treatment and Aesthetic Character: The basic design of the proposed uses, buildings or development; the relationship between the buildings and the land; the relationships between uses and between buildings and structures; the overall physical appearance of the proposed use, building or development and its subsequent compatibility with surrounding development and the neighborhood.

   Findings as to design, architectural treatment and aesthetic character shall be made in view of the fact that excessive uniformity, dissimilarity, inappropriateness or poor quality of design in the exterior appearance of buildings erected in any neighborhood adversely affects the desirability of the immediate area and the neighboring areas for residential, commercial or other purposes, and, by so doing, impairs the benefits of occupancy of existing property in such areas, the stability and value of both improved and unimproved real property in the area, prevents the most appropriate development and use of such areas, produces degeneration of property with attendant deterioration of conditions in the area affecting the health, general safety and welfare of the community, and destroys a proper relationship between the taxable values of real property in the area and the cost of municipal services provided thereto.

5. In the case of a public utility structure, the public necessity for the utility service provided and technical constraints necessitating the location of the proposed facility within the subject area.

C. Procedure - Application for a Special Permit shall be made to the Commission and shall include: *10/18/03*

1. A statement describing the existing and proposed use or uses.
2. A Special Permit plan, including the information contained in §7.4, except as such information may be waived in accordance with §7.4.H. *10/18/03*
3. Such other information as the Commission may require to determine compliance with the intent and purpose of this regulation.

D. Public Hearing and Notice: The Commission shall hold a hearing on all applications for a Special Permit, and shall publish a notice of said hearing in a newspaper of general circulation in accordance with §10.2.A herein and §8-3c of the Connecticut General Statutes. The Commission shall also give notice of any such hearing at least 10) days prior to the date of the hearing to the applicant filing the application.

1. In addition to published notice, each applicant for a Special Permit shall provide notice of such hearing to the public using the following methods:
   a) The applicant shall erect or cause to have erected a sign(s) on the property affected by the proposed Special Permit at least 10 days prior to the public hearing on such Special Permit. If more than

one street abuts the property, a sign shall be erected next to, and shall be clearly visible from, each abutting street. Each sign shall be a minimum of four by five (4 X 5) feet with black lettering no smaller than three by one-half (3 X 1/2) inches on a white background. Each sign shall be weather resistant, securely fastened or staked, be clearly visible from the streets abutting the applicant's property and be maintained as such until the day following the public hearing. For purposes of this section only, street shall include unaccepted streets for which the Town has no maintenance responsibility and shall include any streets shown on a subdivision plan approved by the Commission on which the bond for required public improvements has been posted and on file in the Town Clerk's office. The sign shall contain the following information:

10/08/94

PUBLIC NOTICE

AN APPLICATION FOR A SPECIAL PERMIT FOR A (TYPE OF USE) HAS BEEN FILED WITH THE PLANNING AND ZONING COMMISSION. A PUBLIC HEARING WILL BE HELD ON SAID PETITION ON (DATE OF HEARING) IN TOWN HALL. FOR MORE INFORMATION, CONTACT THE WALLINGFORD PLANNING DEPARTMENT AT 294-2090.

b) A report from the Zoning Enforcement Officer attesting to whether the above described sign was erected and maintained as required shall be made part of the record at the public hearing. Failure of an applicant to comply with this requirement may be grounds for automatic denial of the Special Permit, with consideration being given to cases where weather conditions or acts of vandalism have destroyed a properly posted sign.

c) Each application for a Special Permit shall include a list, prepared by the applicant, of the names and mailing addresses of the owners of all of the properties abutting the applicant's property as shown in the most recent records on file in the Town Tax Assessor's Office (or the actual owner of record if otherwise known to the applicant). Abutting property owners shall include owners located directly across the streetline as well as contiguous property owners. The applicant shall mail notification of said pending application to at least one owner of each such property ten (10) to fifteen (15) days before the date set for the public hearing, by transmitting the text of the public hearing notice as provided by the Commission. Evidence of such mailing, in the form of United States Post Office Certificates of Mailing, shall be submitted to the Planning Office along with the above said list of property owners, not less than five (5) calendar days prior to the hearing date. Failure to comply with any of the procedures required herein shall be deemed valid basis for denial of a Special Permit request.

07/14/01

d) A property which does not abut a street must comply with §7.5.D.1.c only.

E. Any applicant having obtained approval of a Special Permit shall complete all work within the time limits established by 8-3 of the CT General Statutes. All Special Permits shall be developed and used in accordance with the plans approved by the Commission, as well as any conditions of approval attached to those plans. *09/19/09*

F. Conditions and safeguards: Any conditions or safeguards, attached to the granting of a Special Permit, shall remain with the property, as long as the Special Permit use shall still be in operation. These conditions and safeguards shall continue in force regardless of any change in ownership of the property.

G. Revocation: Any authorized Special Permit shall be subject to revocation by the Commission if any condition or safeguard imposed by the Commission upon buildings, structures, land or uses for said permit shall not be strictly adhered to by the applicant.

H. Amendments or modifications: Applications for Special Permit amendments which are necessitated by site conditions or which are deemed to be in the public interest shall be made in the same manner as the original application; except that amendments which are found to be of a minor nature or which do not materially alter the Special Permit as determined by the Commission may be authorized with Commission approval only, without another public hearing.

I. Time period and expiration: Any applicant having obtained approval of a Special Permit shall complete all work within the time limits established by §8-3 (Site Plan) or §8-26C Subdivision) of the CT General Statutes, except that the Commission may set other time limits on the permit and/or require periodic renewal of the permit without a public hearing if appropriate for the particular Special Permit use. Expired Special Permits shall be considered not valid.

J. Continuance: Notwithstanding any other provision of these regulations, when an amendment is adopted to these zoning regulations or boundaries of zoning districts, a Special Permit which shall have been approved according to the regulation in effect at the time of filling, shall not be required to conform to such amendment provided:
   1. Construction of any of the proposed improvements, including but not limited to roads, sewer lines, landscaping, recreational facilities, etc., shall have commenced within 12 months from the effective date of the Special Permit approval.
   2. If the applicant shall not adhere to these conditions, the Special Permit shall be reconsidered by the Commission and declared void. Notification thereof shall be filed with the Town Clerk and applicant so notified.

K. The Town Planner may waive the requirement to include any of the required site plan information, or any other written or graphic information or reports specified for any of the uses requiring a Special Permit if such information or reports do not pertain to the proposal; or are not necessary to determine compliance with the regulations; or will have no impact or negligible impact on the Special Permit objectives set forth herein. The Town Planner shall note on the application, or in an otherwise designated format, those requirements which have been waived or modified; such note shall serve as notification to the Commission of such waiver. Unless the Commission requires the inclusion of any of the waived requirement(s), approval by the Commission shall be deemed to include approval of the waiver of the requirements as determined by the Town Planner. *03/02/13*

ARTICLE VIII

Enforcement and Administration

§8.1 AUTHORITY

These Regulations shall be administered by the Commission and its appointed agents. A Zoning Permit shall be applied for and issued if the provisions of these regulations shall be complied with. Forms for such application shall be furnished by the Commission.

§8.2 ENFORCEMENT

These regulations shall be enforced by the Commission and its appointed agent, who are hereby authorized to cause any building, structure, place or premises to be inspected and examined, and to order, in writing, the remedying of any condition found to exist therein in violation of any provision of these regulations.

A. The regulations concerned with storm water drainage facilities, including detention basins, the objectives of which are set forth in S 7.2.I and which are specifically provided for in §6.30, shall be enforced by the Town Engineer, or the Town Engineer's designee, who are hereby authorized to cause any premises to be inspected and to order the remedying of any condition found to exist therein in violation of such regulations. *08/16/08*

§8.3 ZONING PERMITS *05/01/09*

No building or structure shall be erected, installed, added to, or structurally altered and no use shall be established or changed until a Zoning Permit has been issued by the Commission or its agents. All applications for such permits shall be in accordance with the requirements of these regulations.

A. Applications. Each application shall be accompanied by such information and exhibits as are required herein or may reasonably be required in order that the proposal of the applicant may be adequately interpreted and judged as to its conformity with the provisions set forth in these regulations.

B. Zoning Location Survey. The application shall be accompanied by one copy of a zoning location survey prepared by a land surveyor licensed in the State of Connecticut, drawn to scale, showing the actual dimensions of the lot to be built upon, the size of the building or structure to be erected, the use or re-use of the building or structure, the location of the building or structure upon the lot, the distance between the building or structure and the setback lines and/or property lines, the location of driveways and curb cuts, parking spaces, and easements or rights-of way on the property, and such information as may be necessary. This survey shall be prepared in accordance with Sections 20-300b-1 through 20-300b-20 of the Regulations of Connecticut State Agencies "Standards for Surveys and Maps in the State of Connecticut" as adopted by the Connecticut Association of Land Surveyors, Inc. on September 26, 1996.

C. The Commission or its agents may waive any of the zoning location submission requirements in cases where they are not needed to determine conformity with these regulations.

D. A Zoning Location Survey will not be required for above-ground swimming pools, sheds, decks, fences and similar structures unless the Commission or its agents determine that they do not have sufficient information to determine that the building or structure complies with these regulations.

§8.4 BUILDING PERMITS

No Building Permit shall be issued by the Building Inspector for any building, building addition, structure, structural alteration, use or change in use unless and until the Commission or its appointed agent, certifies, in writing, that such building, structure or use is in compliance with or is a valid non-conforming use under these regulations. A bond for sedimentation and erosion control and covering improvements in the public right-of-way, including but not limited to, driveway aprons, curb cuts, and sidewalks, may be required prior to the issuance of a Building Permit.

A. Expiration of permit. A Building Permit shall become null and void unless construction is commenced within six months from the issuance, unless the Building Inspector, for good cause, shall have extended such time, in writing. After commencement of construction, any cessation of activities for six months of more shall void the permit, unless the Building Inspector, for good cause, extends the time period.

§8.5 FOUNDATION VERIFICATION

The applicant shall submit a certified "As-Built" Plot plan to the Commission, or its appointed agents, showing foundation footings, columns, piers or walls, for verification of setbacks for any new, detached building or structure on a lot. The Commission or its appointed agents, may require a certified "As-Built" plot plan in other situations involving close proximity to setback lines, lot lines, wetland boundary lines, channel encroachment lines, mean high water lines, or other similar building restriction lines.

§8.6 UTILITY VERIFICATION *04/18/09*

A. All storm drainage facilities, and water and sanitary sewer facilities required by any Site Plan, Special Permit, or subdivision, approved by the Commission, shall be installed by the applicant and inspected for compliance by the Engineering Department or the Utility Department prior to the backfilling of any such utility holes or trenches. The applicant shall notify the proper department when the utility is ready for inspection; the proper department shall inspect the utility within a reasonable period of time.

B. In those cases where a storm-water attenuation system is required, the applicant shall submit an As-Built map, signed and sealed by a land surveyor or an engineer licensed to practice in the State of Connecticut, with sufficient contours or spot grades as appropriate showing that all the drainage facilities, including detention basins, any other underground or above-ground drainage facilities and final grading where relevant to indicating drainage patters or flows to the Commission's

staff or designee, certifying that any such drainage facilities or grading have been constructed or installed in substantial compliance with the approved plan prior to the Commission action on acceptance of any road or release or reduction of any performance bond.

C. The As-Built map shall be submitted when all physical improvements required by the approved plan or the phase of the approved plan for which the applicant is seeking action from the Commission have been constructed or installed.

D. The As-Built map must include, in addition to identification legends and date, project approval date and survey date, the following information:
   1. Detention/retention basin topography;
   2. Size and elevation of emergency overflows;
   3. Size, lengths and elevations of storm water storage pipe;
   4. Size, elevation and material of inlet/outlet pipes;
   5. Size, elevation and material of outlet control structures including all outlet weirs, ports, orifices, baffles, etc.

E. In those cases where the site for which development is sought is situated within the Watershed protection District, the As-Built map must also include the following additional information:
   1. Paved parking lots, driveways, sidewalks, loading ramps and travel ways including finished grades of the paved surfaces;
   2. Buildings and roofed structures including roof drainage piping;
   3. Catch basins, manholes, diversion structures, drainage swales and any other stormwater inlet structures including top of frame and invert elevations;
   4. Size, type, slope and invert elevations of storm sewer and drainage pipes that make up the stormwater collection, treatment and discharge systems.
   5. Oil/water separators, grit separators and any other required stormwater pretreatment devices including top of frame and invert elevations;
   6. Finished grades and contours (at one-foot vertical intervals) of the sand filter basin;
   7. Delineation of the underdrain and outlet piping of the sand filter basin including invert elevations;
   8. Size, elevations and materials of emergency overflows, spillways, control structures and outlet weirs including ports, orifices, baffles, etc.
   9. Location and details of infiltration galleys, lagoons and dry wells; and
   10. Delineation of natural watercourses and bodies of water including the downstream watercourse that receives the stormwater system's discharge.

F. The As-Built map, except for showing the draining facilities in sufficient contours or spot grades, shall be plan view, scale 1 inch = 40 feet. The profile map shall be drawn on the same sheet with and beneath the map, at a scale of 1 inch = 40 feet horizontal and 1 inch = 4 feet vertical. The As-Built map may be submitted on standard paper for comments. The final map shall be submitted on mylar sheets, 24" X 36".

§8.7 CERTIFICATION OF ZONING COMPLIANCE

A Certificate of Zoning Compliance shall be applied for from the Commission or its appointed agent at the same time as application is made for a Certificate of Occupancy from the Building Inspector. After notification from the applicant that the land, building, or structure is ready for occupancy or use, the Commission or its appointed agent shall determine if it is in compliance with these regulations. The Commission or its appointed agent may require an "As-Built" certified plot plan and any other information which may be necessary to make a determination as to compliance with these regulations.

A. Deleted *10/2/94*

B. Conditional Certificate of Zoning Compliance. When the required site work cannot be completed because of inclement weather or other pertinent reasons, a Conditional Certificate of Zoning Compliance may be issued by the ZEO for a period not to exceed six months. The applicant may be required to post a bond in accordance with §8.10, to guarantee satisfactory completion of the site work in accordance with these regulations.

§8.8 CERTIFICATE OF OCCUPANCY

No land shall be used except for farming or gardening purposes, and no new building or structure hereafter constructed shall be occupied or used unless a Certification of Zoning Compliance shall have been issued by the Commission or its appointed agent and until a Certificate of Occupancy shall have been issued by the Building Inspector. No building or structure which is altered, reconstructed, extended, enlarged, moved, changed or converted, such reconstruction, alteration, etc., increasing the fair market value of the building or structure more than 50%, shall be occupied or used unless a Certificate of Compliance shall have been issued by the Commission or its appointed agent and until a Certificate of Occupancy shall have been issued by the Building Inspector.

In situations where an application for a Certificate of Occupancy concerns property within an incomplete subdivision, a written confirmation from the Engineering Department that the first course of paving has been installed and is adequate to provide ingress and egress, and that the additional public improvements required are in a sufficient state of completeness so as not to significantly diminish the use of such property, shall be required prior to the issuance of a Certificate of Occupancy.

§8.9 FEES

All applications for Zoning Permits, Certificates of Zoning Compliance, Site Plan Approvals and Special Permits shall be accompanied by a fee, in accordance with an adopted fee schedule, as determined from time-to-time by the Commission. Said fee shall be paid at the time of filing the application.

§8.10 PERFORMANCE BONDS

The Commission shall, if required by these regulations or deemed necessary by the Commission, require a performance bond, in a form and amount acceptable to

the Commission, or its designated agents, to guarantee performance of the site work as shown on the approved Site Plan. Such bond or surety may, at the discretion of the person posting such bond or surety, be posted at any time before all work of the site plan is complete, except that the Commission may require a bond or surety for erosion control prior to the commencement of any such work. No Certificate of Occupancy shall be issued before a required bond or surety is posted. For any site plan that is approved for development in phases, the surety provisions of this section shall apply as if each phase was approved as a separate site plan. *10/15/11*

A. An itemized estimate of the cost to the Town of the specific improvements in the public right-of-way shall be prepared by the Town Engineer on a form which itemizes the bond amount for specific improvements. The total bond amount shall also include an additional 10% to cover contingencies. The bond may be in the form of a check payable to the Town, an irrevocable letter of credit from an acceptable bank, or a bond underwritten by a surety company duly licensed and authorized to conduct business in the State of Connecticut and approved by the Commission. Said bond shall be posted with the Town in accordance with these regulations and with the approval of the Commission. Unless released or extended by the Commission, a bond shall be held until the applicable permit expires, at which time the Commission may call the bond and use the proceeds to complete the bonded work. . *03/13/04 03/14/09 10/15/11*

B. If the person posting a bond or surety under this section requests a release of all or a portion of such bond or surety, the Commission or its agent shall, not later than sixty-five (65) days after receiving such written request, (A) release any such bond or surety or portion thereof, provided the Commission or its agent is reasonably satisfied that the modifications for which such bond or surety or portion thereof was posted have been complete, or (B) provide the person posting such bond or surety with a written explanation as to the additional work that must be completed before such bond or surety or portion thereof may be released. *10/15/11*

C. Upon written request of the applicant for the reduction or release of the bond, the procedure shall be as follows: If for the reduction of the bond, the site work shown to have been completed shall be inspected by the Town Engineer or his designee to determine if all of the conditions of approval for such work have been satisfied. If reduction is authorized, the Commission may take into consideration the estimated value of the work remaining to be completed, based on current construction costs, in determining the amount, if any, of the reduction. If for release of the bond, the site shall be inspected by the Town Engineer or his designee to determine if all of the conditions of approval have been satisfied and if all required site improvements have been satisfactorily completed in accordance with the approved plans. Before reduction or release of any performance bond, the Commission may require the applicant to submit an As-Built map certifying that all of the required site improvements for which the reduction or release is sought have been constructed or installed in accordance with the approved plans. Based on the results of the inspections, the Commission may authorize the reduction or release of the bond or surety.

§8.11 VIOLATIONS

The Commission, or its appointed agents, shall examine any alleged violation of these regulations and may employ qualified experts for such examination. The services of any qualified experts employed by the Town to advise in establishing a violation shall be paid by the violator if a violation is proved and, otherwise, by the Town.

Any person, firm or corporation violating any provision of these regulations, shall be subject to the remedies and penalties prescribed by the General Statutes.

ARTICLE IX
Zoning Board of Appeals

§9.1 ZONING BOARD OF APPEALS

A. Purpose - The Zoning Board of Appeals (ZBA) is an agency, separate from the Planning and Zoning Commission, engaged in, and necessary to the proper administration of these Zoning Regulations. The ZBA is an administrative agency which exercises quasi-judicial functions to provide relief in cases where literal application of the Zoning Regulations acts peculiarly on a particular piece of property to produce an undue hardship on that property under special circumstances and to provide a local review for questions arising from zoning enforcement. The exercise of the ZBA's power to vary the Zoning Regulations is guided by the General Statutes and the general rule of law as well as by local zoning conditions.

B. Establishment of the ZBA - The ZBA, established pursuant to the General Statutes and Town Charter, shall have all the powers and duties prescribed by law and these regulations.

C. Power and Duties - The ZBA shall have the following powers and duties:

.

1. Appeals - To hear and decide appeals where it is alleged that there is an error in any order, requirement or decision made by the ZEO or any other official charged with the enforcement of these regulations excluding decisions of the Commission pursuant to Articles III, IV, V, VI, VII of the Zoning Regulations and the Subdivision Regulations, unless such decision is a determination of a zoning violation. Such appeal shall be made within 15 days of the decision appealed from. *03/15/02*
2. Other Matters - To hear and decide all matters, including Special Exceptions, upon which it is required to pass by the specific terms of these regulations.
3. Variances - To determine and vary the application or provisions of these regulations in harmony with their general purpose and intent and with due consideration for conserving the public health, safety, convenience, welfare and property values solely with respect to a parcel of land where, owing to conditions especially affecting such parcel but not affecting generally the district in which it is situated, a literal enforcement of these regulations would result in exceptional difficulty or unusual hardship, so that substantial justice will be done and the public safety and welfare secured. Financial detriment shall not be considered an unnecessary hardship.
4. Location of Uses - Deleted *09/17/05*

D. Rules and Procedure - The ZBA shall adopt such rules, regulations and procedures as may be deemed necessary to carry into effect the provisions of these regulations.

E. Public Hearing Conducted by ZBA - Notice of public hearings on Variances, Special Exceptions and Appeals: *09/17/05*

1. The ZBA shall hold a public hearing on all applications. The ZBA shall conduct the proceedings in conformance with the Connecticut General Statutes. Notice of the time, place and purpose of such hearings shall be published in a newspaper having substantial circulation within the Town at least twice at intervals of not less than two days, the first not more than 15 days nor less than 10 days and the last not less than 2 days before the hearing by the ZBA. The ZBA shall hold all public hearings within 65 days after the date of receipt of an application. *10/02/94*
2. Where an applicant's property is within 500 feet of a municipal boundary, the municipal clerk of said adjoining municipality shall be notified of the hearing by certified mail within one week after the application is received. *10/01/03*
3. Each application to the ZBA shall include a list, prepared by the applicant, of the names and mailing addresses of the owners of all abutting property, as shown on the most recent records on file in the Tax Assessor's Office (or the actual owners of record if otherwise known to the applicant). The applicant shall mail notification of said pending application to at least one owner of each such property 10) to 150 days before the date *07/14/01* before the date set for the public hearing, by transmitting the text of the public hearing notice as provided by the ZBA.
4. Evidence of such mailing, in the form of United States Post Office Certificates of Mailing, shall be submitted to the agent of the ZBA along with the above said list of property owners, not less than 5 calendar days prior to the hearing date. Failure to comply with any of the procedures required herein shall be deemed valid basis for denial of an application.

F. Decisions of ZBA - In granting an application, the ZBA may prescribe any conditions applying thereto that it may deem necessary or desirable. Decisions of the ZBA shall be made in accordance with the purpose and spirit of these regulations.

G. Deleted *09/17/05*

H. Variances, where by reason of exceptional narrowness, shallowness, shape, topographical or unusual condition of a specific property, and not common to the surrounding area as a whole, and where the strict application of the requirements or limitations of any district would result in peculiar and undue hardship upon the use of the property, as contrasted with merely granting an advantage or convenience, the regulations may be varied.

   l. No variance shall be granted on any allegation of hardship resulting from an act of the applicant subsequent to the adoption of this regulation, whether in violation of the provisions hereof or not. Before granting a variance on the basis of unusual difficulty or unreasonable hardship, the ZBA shall consider the following conditions:
   a. That if the owner complies with the provisions of these regulations, he would not be able to make any reasonable use of his property.
   b. That the difficulties or hardship are peculiar to the property in question, in contrast with those of other properties in the same district.
   c. That the hardship was not the result of the applicant's own action.

d. That the hardship is not merely financial or pecuniary.
e. Every application for a use variance filed with the Zoning Board of Appeals shall at the same time be filed by the applicant with the Planning and Zoning Commission. The applicant shall certify to the Zoning Board of Appeals that such application was filed with the Planning and Zoning Commission. The Planning and Zoning Commission may file a report with the Zoning Board of Appeals concerning the application. The failure of the Planning and Zoning Commission to file a report with the Zoning Board of Appeals concerning the application shall not be taken as agreement with such application. *03/20/90*

2. Survey Requirements – When an application is submitted for a variance of required yard setbacks, maximum building coverage, or other similar regulations, and a Zoning Location Survey will be required by §8.3 for the proposed project, said survey shall be submitted at the time of application for the variance. No variance will be granted for which a required Zoning Location Survey has not been submitted. *09/19/09*

I. Interpretation - Upon appeal from a decision of the ZEO and subject to appropriate conditions and safeguards, the ZBA may interpret or determine the following:
1. The true location of any district boundary line.
2. The existence of a non-conforming use.
3. Any other interpretation by the ZEO.

J. Special Exceptions - To hear and decide requests for Special Exceptions where required by the specific terms of these Regulations. Each specific Special Exception for which a permit is sought shall be considered as an individual case and shall, in addition to other standards prescribed in these regulations, conform to the detailed application of the following standards in a manner appropriate to the particular circumstances of such use:

1. The nature, location, size, intensity and site layout of the use shall be such that it will be in harmony with the appropriate and orderly development of the area in which it is situated.
2. The nature and size of the use, the nature and intensity of the operations involved in or conducted in connection with it, its site layout, and its relation to streets giving access to it shall be such that both pedestrian and vehicular traffic to and from the use and the assembly of persons in connection with it, shall not be hazardous or inconvenient to the predominant character of the neighborhood, or conflict with the normal traffic of the neighborhood, taking into consideration, among other things, convenient routes of pedestrian traffic, particularly street intersections, vehicular turning movements in relation to routes and volumes of traffic flow, sight distances, and adequacy of parking facilities.
3. The location and height of buildings and structures, the location, nature and height of walls and fences and the nature and extent of landscaping on the site shall be such that the use shall not hinder or discourage the appropriate development and use of adjacent lands and buildings or impair the value thereof.
4. The ZBA may require that permits for Special Exceptions be periodically renewed with a time period prescribed by the ZBA. Any approval shall commence within one year, unless the Board grants an extension of time.

K. Time of Decision - The ZBA shall render its decision on such an application within the time limits established by §8.7(d) of the Connecticut General Statutes. *10/01/03*

L. Interval Between Hearings - The ZBA shall not be required to hear any application for the same variance or substantially the same variance for a period of six months after a decision by the Board or by a court on an earlier such application.

M. Any applicant to whom a variance is granted within the special flood hazard area shall be given written notice that the structure will be permitted to be built with the lowest floor elevation below the base flood elevation (BFE), and that the cost of flood insurance will be commensurate with the increased risk resulting from the lowest floor elevation. *12/17/10*

ARTICLE X

Amendments

§10.1 INITIATION OF AMENDMENTS; HEARING

On its own initiative or on receipt of a written application to amend any portion of these regulations or the Official Zoning Map, the Commission may amend these regulations or change the boundaries of the zoning districts herein established after public hearing in accordance with Chapter 124, §8.3, of the General Statutes.

§10.2 NOTICE OF HEARING

A. Notice of the time and place of such hearing shall be published in a newspaper of substantial circulation in the Town at least twice, at intervals of not less than two days, the first not more than 15 days nor less than 10 days and the last not less than 2 days before such hearing, and a copy of such proposed regulation or boundary shall be filed in the office of the Town Clerk for public inspection at least 10 days before such hearing.

B. Each application for Amendment to the Official Zoning Map shall include a list, prepared by the applicant, of the names and mailing addresses of the owners of all land included within the application and of all properties 500 feet or less distant there from, all as shown on the most recent records on file in the Town Tax Assessor's Office (or the actual owners of record if otherwise known to the applicant). The applicant shall mail notification of said pending application to at least one owner of each such property 10 to 15 days before the public hearing, by transmitting the text of the public hearing notice as provided by the Commission. *07/14/01*

C. Evidence of such mailing, in the form of United States Post Office Certificates of Mailing, shall be submitted to the Planning Office along with the above said list of property owners, not less than 5 calendar days prior to the hearing date. Failure to comply with any of the procedures required herein, shall be deemed valid basis for denial of the subject request.

B. In addition to complying with the standards contained in the Connecticut General Statutes, Commission initiated changes to zoning district boundaries shall be advertised by publishing at least one advertisement in a local newspaper having a wide circulation in Town. *10/18/03*

§10.3 FILING OF PROTEST

If a protest is filed at such hearing with the Commission against such change, signed by the owners of 20 percent or more of the area of lots included in such proposed change or of the lots within 500 feet in all directions of the property included in the proposed change, such change shall not be adopted except by a vote of two-thirds of all the members of the Commission.

§10.4 APPLICATION FOR AMENDMENT

04/14/86

A. Any person who is a property owner or resident of the Town or their duly authorized agent, may make written application for amendment of these regulations, signed by the applicant or his agent.

B. An application for an amendment to the official Zoning Map shall be accompanied by 16 copies of an A-2 Survey, showing the proposed boundaries, prepared by a Connecticut licensed land surveyor. Said map shall contain a location map showing all properties within 500 feet of the subject property. An application for a change of zoning district boundary shall be signed by the owner of the property.

C. Any application for an amendment to the official Zoning Map made pursuant to §8-30g of the CT General Statutes shall also include a conceptual site plan including but not limited to:

1. Location and type of residential units.
2. Topography and wetland data.
3. Roads, driveways and parking, including preliminary grading and turning radii.
4. Source of adequate water supply.
5. Method of adequate sewage disposal.
6. Preliminary stormwater management plan.
7. Traffic impact statement. *10/15/00*

§10.5 NOTICE TO REGIONAL PLANNING AGENCY

Where a proposed boundary or use change occurs within 500 feet of a municipal boundary, the Commission shall give written notice to the Regional Planning Agency by certified mail, return receipt requested, not later than 30 days before the public hearing to be held in relation thereto. The report from the Regional Planning Agency shall be made a part of the record of such hearing.

10/01/03

§10.6 ACTION BY PLANNING AND ZONING COMMISSION

Within the time limits established by the CT General Statutes, the Commission shall act to approve or disapprove the proposed amendment by a majority vote of all the members of said Commission. *10/02/94*

§10.7 APPLICATION FEE; ADDITIONAL COSTS

Any applicant petitioning the Commission for a change to these regulations or zoning district boundaries shall pay an application fee.

§10.8 RE-APPLICATION

Under §8-3 of the General Statutes, the Commission shall not be required to hear any petition or petitions to the same change in these regulations or zoning district boundaries or substantially the same change more than once in a period of 12 months.

ARTICLE XI

Validity

§11.1 SEVERABILITY OF PROVISIONS

If any section, paragraph, subdivision, clause, provision or portion of provision of these regulations shall be adjudged invalid, such adjudication shall apply only to the section, paragraph, subdivision, clause, provision or portion of provision so adjudged, and the remainder of these regulations shall be deemed valid and effective.